JANVIER 1981 JANUARI MENSUEL N° 1 MAANDELIJKS

P 3770

SERVICE GÉOLOGIQUE DE BELGIQUE
AARDKUNDIG DIENST VAN BELGIË

Annales des Mines de Belgique

Annalen der Mijnen van België

Annales des Mines de Belgique

Annalen der Mijnen van België

Publication de l'Institut National des Industries Extractives et de l'Administration des Mines

Publikatie van het Nationaal Instituut voor de Extractiebedrijven en het Bestuur van het Mijnwezen

Direction-Rédaction
Institut National
des Industries Extractives
B-4000 Liège, rue du Chéra, 200

Directie-Redactie
Nationaal Instituut
voor de Extractiebedrijven
Tél. (041) 52 71 50

Edition - Abonnements
Publicité
Editions Techniques
et Scientifiques

B-1050 Bruxelles
Rue Borrens, 35-43
Tél. (02) 640 10 40

Uitgeverij - Abonnementen
Advertenties
Technische en Wetenschappelijke
Uitgaven

B-1050 Brussel
Borrensstraat, 35-43
Tel. (02) 640 10 40

SOMMAIRE
Janvier 1981

INHOUD
Januari 1981

	Renseignements statistiques Statistische inlichtingen	4
	Fifth International Conference on Coal Research **Düsseldorf, September 1st-5th, 1980**	9
W. Brand	Development trends in mining techniques	13
J.J. Yancik	Results obtained from the application of new coal mining techniques	23
A. Brink	Coal gasification and liquefaction	31
A.W. Deurbrouck	Coal preparation	35
A.D. Dainton	Coal utilisation	43
B. Barchanski	Nouvelles méthodes de fonçage de puits par congélation en Pologne Nieuwe methoden voor het schachtboren met bevriezing in Polen	51
J. Medaets	Statistique des accidents survenus au cours de 1979 dans les mines de houille et dans les autres établissements surveillés par l'Administration des Mines Statistiek van de ongevallen in de kolenmijnen en in de andere inrichtingen onder het toezicht van de Administratie van het Mijnwezen in 1979	59
	Selection of Coal Abstracts	85

D/1981/0168

BELGIQUE-BELGIE

MINES DE HOUILLE - STEENKOLENMIJNEN

OCTOBRE-OCTOBER 1980

BASSINS MINIERS / MIJNBEKKENS — Périodes / Perioden	Production nette / Netto produktie t	Consomm. propre et Fournit. au pers. / Eigen verbr. en levering aan het pers.	Stocks / Voorraden t	Jours ouvrés / Gewerkte dagen	PERSONNEL — PERSONEEL: Nombre d'ouv. présents / Aantal aanwezige arb.: Fond / Ondergrond	Fond et surface / Onder- en bovengrond	Indices - Indices: Taille / Pijler	Fond / Ondergrond	Fond et surface / Onder- en bovengrond	Rendement (kg) / Rendement (kg): Fond / Ondergrond	Fond et surface / Onder- en bovengrond	Présences (1) / Aanwez. (%): Fond / Ondergrond	Fond et surface / Onder- en bovengrond	Mouvem. main-d'œuvre / Werkkrachten schomm.: Belges / Belgen	Etrangers / Vreemdel.	Total / Totaal	Grisou capté et valorisé / Opgevangen en gevaloriseerd mijngas: m³ à 8.500 kcal 0° C 760 mm Hg
Sud - Zuiden	34.500	2.088	19.199	23.00	773	1.119	0.197	0.521	0.785	1.921	1.274	61.37	66.39	— 1	— 23	— 24	697.650
Campine - Kempen	555.206	31.662	223.228	22.84	11.226	14.314	0.101	0.438	0.566	2.283	1.767	84.73	86.32	+ 19	— 36	— 17	2.151.733
Le Royaume - Het Rijk	589.706	33.750	242.427	22.85	11.999	15.433	0.106	0.443	0.579	2.258[2]	1.728[2]	82.80	84.57	+ 18	— 59	— 41	2.849.383[3]
1980 Septembre - September	543.122	28.262	200.512	22.00	11.678	15.111	0.109	0.453	0.596	2.206	1.678	82.56	84.45	+ 61	— 17	+ 44	2.274.130
Août - Augustus	407.564	28.538	152.938	20.00	9.709	12.852	0.105	0.457	0.617	2.188	1.622	83.16	85.04	+ 25	— 58	— 33	3.454.485
1979 Octobre - Oktober	527.724	35.582	93.850	20.07	12.114	15.963	0.119	0.460	0.622	2.170	1.608	82.65	84.47	— 67	— 47	— 114	2.469.396
1979 M.M.	510.375	35.286	150.347	19.00	11.739	15.517	0.111	0.442	0.596	2.265	1.678	88.67	82.77	— 20	— 47	— 67	3.277.647
1974 M.M.	675.915	46.823	243.710	20.06	14.579	20.472	0.130	0.444	0.629	2.254	1.590	80.70	83.36	— 63	+ 12	+ 50	5.034.404
1970 M.M.	1.022.392	93.227	214.909	18.80	21.479	30.162	0.157	0.438	0.625	2.284	1.599	83.13	85.37	— 151	— 146	— 297	4.555.460
1969 M.M.	1.100.040	90.639	630.744	19.57	25.339	35.067	0.170	0.473	0.664	2.112	1.506	82.37	84.54	— 281	— 402	— 685	5.783.024
1968 M.M.	1.233.946	94.468	1.735.082	20.28	30.101	40.787	0.184	0.506	0.705	1.976	1.418	83.55	85.55	— 200	— 315	— 515	5.393.912
1966 M.M.	1.454.276	104.342	3.045.509	19.72	40.231	54.455	0.219	0.569	0.787	1.758	1.270	85.07	86.66	— 435	— 617	— 1052	4.936.413
1964 M.M.	1.775.376	118.885	1.488.665	21.33	50.710	68.032	0.237	0.635	0.866	1.574	1.155	83.71	85.66	— 291	+ 323	+ 32	5.514.722
1960 id.	1.872.443	176.243	6.606.610	20.50	51.143	71.460	0.268	0.700	0.983	1.430	1.018	81.18	83.70	— 753	— 745	-1498	5.702.727
1956 id.	2.455.079	234.456	179.157	23.43	82.537	112.943	0.35	0.86	1.19	1.156	838	84.21	86.29	— 357	— 300	— 657	7.445.776
1948 id.	2.224.261	229.373	840.340	24.42	102.081	145.366	—	1.14	1.64	878	610	—	85.88	—	—	—	—
1938 id.	2.465.404	205.234	2.227.260	24.20	91.945	131.241	—	0.92	1.33	1.085	753	—	—	—	—	—	—
1913 id.	1.903.466	187.143	955.890	24.10	105.921	146.084	—	1.37	1.89	731	528	—	—	—	—	—	—
1981 Semaine du 24-1 au 30-1 / Week van 24-1 tot 30-1	135.260		149.584	5.00	12.110	15.721				2.246	1.719	74.00	77.00				

N. B. — (1) Uniquement les absences individuelles. — Alléén individuele afwezigheid
(2) Sans les effectifs de maîtrise et de surveillance : Fond : 2.686 — Fond et surface : 2.038. — Zonder de sterkte van meester- en toezichtspersoneel : Ondergrond : 2.686 — Onder- en bovengrond : 2.038.
(3) Dont environ 6 % non valorisés. — Waarvan ongeveer 6 % niet verbruikt.

BELGIQUE
BELGIE

FOURNITURE DE CHARBONS BELGES AUX DIFFERENTS SECTEURS ECONOMIQUES
LEVERING VAN BELGISCHE STEENKOLEN AAN DE VERSCHEIDENE ECONOMISCHE SECTORS

OCTOBRE 1980
OKTOBER 1980

PERIODES / PERIODEN	Foyers domestiques, artisanat, commerce, administrations publiques	Huisbrand, klein-bedrijf, handel, openbare diensten	Cokeries / Cokesfabrieken	Fabriques d'agglomérés / Agglomeratenfabr.	Centrales électr. publiques / Openbare elektr. centrales	Sidérurgie / IJzer- en staalnijverheid	Fabrication métall. / Metaalverwerkende nijverheden	Métaux non ferreux / Non-ferro metalen	Chimie / Chemische nijverh.	Chemins de fer et autres transports / Spoorwegen en ander vervoer	Textiles, habillement, cuir / Textiel, kleding-leder	Denr. alim., boissons, tabacs / Voedingswaren, dranken, tabak	Produits minéraux non métalliques	Niet-metalen delfstoffen	Pâtes à papier, papier / Papierpulp, papier	Industries diverses / Allerlei nijverheidstakken	Exportations / Uitvoer	Total du mois / Tot. v. d. maand
1980 Octobre - Oktober		11.994	306.391	4.129	151.377	714	293	17	1.671	138	261	23	589	—	306	41.548	519.451
Septembre - September		15.701	307.814	7.457	99.152	308	847	—	1.661	315	170	43	638	—	150	32.281	466.537
Août - Augustus		9.319	317.689	4.584	84.075	781	607	—	1.380	83	29	22	377	—	59	21.210	440.215
1979 Octobre - Oktober		17.607	304.750	7.520	126.706	1.204	524	6	709	56	50	10	574	—	134	25.996	485.846
1979 M.M.		14.605	314.212	9.034	132.699	1.299	792	243	1.396	309	71	19	399	—	227	24.253	499.556
1974 M.M.		56.041	391.865	28.638	86.007	5.353	1.221	3.890	246	1.034	151	1.676	1.907	25	1.539	32.007	611.569
1970 M.M.		112.550	464.180	54.101	183.135	11.596	19.132	10.100	425	2.370	388	4.161	6.725	4.191	4.359	44.102	925.190
1969 M.M.		132.890	519.889	51.651	271.629	13.387	2.502	12.188	374	2.630	521	5.564	9.328	4.790	3.035	74.823	1.105.199
1968 M.M.		166.544	510.582	63.687	316.154	10.976	2.595	10.189	1.129	3.241	588	6.703	11.598	4.382	3.566	95.376	1.207.310
1966 M.M.	174.956	(2) 12.534	466.091	76.426	334.405	13.655	4.498	15.851	6.366	7.955	1.286	5.496	15.996	(3) 11.063	5.558	14.258	99.225	1.265.649
1964 M.M.	217.027	14.940	526.285	112.413	294.529	8.904	7.293	21.429	13.140	23.176	2.062	13.632	22.867	57.211	10.527	15.150	169.731	1.530.316
1960 M.M.	266.847	12.607	619.271	84.395	308.910	11.381	8.089	28.924	18.914	61.567	6.347	20.418	38.216	58.840	14.918	21.416	189.581	1.770.641
1956 M.M.	420.304	15.619	599.722	139.111	256.063	20.769	12.197	40.601	41.216	91.661	13.082	30.868	64.446	71.682	20.835	32.328(1)	353.828	2.224.332
1952 M.M.	480.657	14.102	708.921 (1)		275.218	34.685	16.683	30.235	37.364	123.398	17.838	26.645	63.591	81.997	15.475	60.800	209.060	2.196.669

N. B. — (1) Y compris le charbon fourni aux usines à gaz. — Daarin begrepen de aan de gasfabrieken geleverde steenkolen.
(2) Fourniture aux administrations publiques. — Levering aan de openbare diensten.
(3) Fourniture aux cimenteries. — Levering aan de cementfabrieken.

BELGIQUE **BRAI** OCTOBRE 1980
BELGIE **PEK t** OKTOBER 1980

PERIODE	Quantités reçues / Ontvangen hoeveelheden: Orig. indig. / Inh. oorspr.	Importations / Invoer	Total / Totaal	Consomm. totale / Totaal verbruik	Stock fin du mois / Voorr. einde maand	Exportations / Uitvoer
1980 Oct. - Okt.	481	—	481	448	88	—
Sept. - Sept.	813	—	813	797	55	—
Août - Aug.	548	—	548	512	39	—
1979 Oct. - Okt.	1.067	217	1.284	1.292	1.330	—
1979 M.M.	948	144	1.092	1.056	1.189	—
1974 M.M.	2.626	815	3.441	2.872	4.623	—
1970 M.M.	4.594	168	4.762	4.751	6.530	193
1969 M.M.	5.187	6	5.193	5.564	8.542	—
1968 M.M.	4.739	86	4.825	5.404	14.882	274
1966 M.M.	4.079	382	4.461	6.329	46.421	398
1964 M.M.	6.515	7.252	13.767	9.410	82.198	1.080
1956 M.M.	7.019	5.040	12.059	—	51.022	1.281
1952 M.M.	4.624	6.784	11.408	9.971	37.357	2.014

BELGIQUE **METAUX NON FERREUX** SEPTEMBRE 1980
BELGIE **NON FERRO-METALEN** SEPTEMBER 1980

PERIODE	Produits bruts - Ruwe produkten: Cuivre / Koper (t)	Zinc / Zink (t)	Plomb / Lood (t)	Etain / Tin (t)	Alum., Antim., Cadm., etc. (t) / Alum., Antim., Cadm., enz. (t)	Poussières de zinc (t) / Zinkstof (t)	Total / Totaal (t)	Argent, or, platine, etc. / Zilver, goud, plat., enz. (kg)	Demi-finis - Half. pr.: Mét. préc. exc. / Edele metalen uitgezonderd (t)	Argent, or, platine, etc. / Zilver, goud, plat., enz. (kg)	Ouvriers occupés / Tewerkgestelde arbeiders
1980 Sept. - Sept.	46.322	20.154	10.963	568	691	2.273	80.976	144.720	51.441	1.955	11.646
Août - Aug.	38.904	19.786	8.962	302	303	3.170	71.427	109.732	45.899	2.476	11.616
Juillet - Juli	26.494	17.692	7.073	278	239	1.416	53.232	117.980	37.781	438	11.704
1979 Sept. - Sept.	52.707	23.716	12.167	399	395	1.998	91.382	62.219	59.013	1.632	11.651
1979 M.M.	43.329	21.810	9.450	395	503	2.282	77.769	79.391	55.446	1.507	11.779
1974 M.M.	32.359	24.466	9.164	353	1.015	4.502	71.857	45.979	25.907	2.591	16.241
1970 M.M.	29.423	19.563	3.707	477			62.428	76.259	36.333	3.320	16.689
1969 M.M.	25.077	21.800	9.366	557			57.393	121.561	36.007	2.451	16.462
1968 M.M.	28.409	20.926	9.172	497			59.486	85.340	32.589	1.891	15.881
1966 M.M.	25.286	20.976	7.722	548			55.128	37.580	32.828	2.247	18.038
1964 M.M.	23.844	18.545	6.943	576			50.548	35.308	29.129	1.731	17.510
1956 M.M.	14.072	19.224	8.521	871			43.336	24.496	16.604	1.944	15.919
1952 M.M.	12.035	15.956	6.757	850			36.155	23.833	12.729	2.017	16.227

BELGIQUE-BELGIE **SIDERURGIE**

PRODUCTION

PERIODE / PERIODE	Hauts fourneaux en activité / Hoogovens in werking	Produits bruts / Ruwe produkten: Fonte / Gietijzer	Acier en lingots / Staalblokken	Acier moulé av. ébard. / Gegoten staal voor afboordding	Produits demi-finis / Half-produkten: Pour relamin. belges / Voor Belg. herwalsers	Autres / Andere	Aciers marchands / Handelsstaal	Profilés / Profielstaal	Rails et accessoires / Spoorstaven en toebehoren
1980 Octobre - Oktober	15	676.300	(1)	(1)	83.342	88.486	68.387	80.191	—
Septembre - September	14	585.724	760.593	2.189	109.228	72.350	81.759	47.972	—
Août - Augustus	18	737.164	926.690	2.159	93.510	57.675	63.486	47.807	—
1979 Octobre - Oktober	23	797.679	1.023.773	2.583	110.114	103.614	102.393	134.157	—
1979 M.M.	20	897.986	1.120.400	2.021	91.681	99.181	94.425	94.188	—
1974 M.M.	39	1.084.970	1.325.540	6.677	79.287	86.412	239.090	121.815	424
1970 M.M.	41	895.076	1.050.953	8.875	51.711	77.649	20.684	77.345	3.139
1969 M.M.	42	924.332	1.069.748	(3)	56.695	69.424	217.770	67.378	4.150
1968 M.M.	41	864.209	964.389	(3)	45.488	58.616	202.460	52.360	3.689
1966 M.M.	40	685.805	743.506	(3)	49.224	63.777	167.800	38.642	4.486
1964 M.M.	44	670.548	727.548	(3)	52.380	80.267	174.098	35.953	3.382
1960 M.M.	53	546.061	595.060	5.413	150.669	78.148	146.439	15.324	5.337
1956 M.M.	50	480.840	525.898	5.281	60.829	20.695	153.634	23.973	8.315
1948 M.M.				(1)					
1938 M.M.	51	327.416	321.059	2.573	61.951		70.980	39.343	9.853
1913 M.M.	50	202.177	184.369	3.508	37.839		43.200	26.010	9.337
	54	207.058	200.398	25.363	127.083		51.177	30.219	28.489

(1) Chiffres indisponibles. — Onbeschikbare cijfers.

BELGIQUE-BELGIE — COKERIES-COKESFABRIEKEN — OCTOBRE-OKTOBER 1980

GENRE PERIODE / AARD PERIODE	Fours en activité / Ovens in werking: Batteries Batterijen	Fours Ovens	Charbon - Steenkolen (t) Reçu - Ontv.: Belge Inheemse	Etranger Uitheemse	Enfourné In de oven geladen	Huiles combustibles Stookolie (t)	COKE - COKES (t) Production - Produktie: Gros coke Dikke cokes > 50 mm	Autres Andere	Total Totaal	Consomm. propre Eigen verbruik	Livr. au personnel Levering aan pers.	Débit - Afzet: Sect. domest., artisanat et admin. publ.	Huis. sektor, kleinbedrijf en openb. diensten	Sidérurgie IJzer- en staalnijverheid	Centr. électr. publiques Openb. elektr. centrales	Transports Vervoer	Autres secteurs Andere sektors	Exportations Uitvoer	Total Totaal	Stock fin de mois Voorraad einde maand (t)	Ouvriers occupés Tewerkgestelde arbeid
Gras - Vetkool			300.127	209.567	564.002																
Autres - Andere			—	7.459	8.232																
Le Royaume - Het Rijk	34	1.104	300.127	217.026	572.234		399.817	38.244	438.061	282	758		1.271	379.044	—	—	8.916	39.798	429.029	189.860	2.515
1980 Sept. - Sept.	34	1.104	311.997	307.098	551.897		389.467	36.455	425.922	338	469		993	351.445	—	291	9.709	37.113	399.551	181.868	2.492
Août - Aug.	33	1.080	312.587	424.224	616.103		439.102	40.831	479.933	160	181		420	380.206	—	253	7.900	67.945	456.724	156.304	2.514
1979 Oct. - Okt.	33	1.084	329.545	408.299	638.354		461.246	42.926	504.172	406	518		2.229	398.336	—	161	6.822	57.695	465.243	160.978	2.477
1979 M.M.	32	1.060	318.693	373.095	688.771		492.076	45.452	537.529	395	194		1.148	456.380	—	115	7.224	70.188	525.056	107.816	2.476
1974 M.M.	45	1.472	396.620	474.551	872.722	(4)	555.914	114.953	670.867	22	1.099		4.834	606.197	14	143	20.155	38.705	653.354	283.183	3.196
1970 M.M.	42	1.378	471.981	335.828	771.875	(4)	483.060	110 208	593.267	196	2.830		6.162	486.084	39	1.176	41.698	50.362	585.521	688.236	3.041
1969 M.M.	41	1.379	515.282	266.488	781.952	(4)	503.144	100.930	604.075	367	3.066		9.084	513.846	21	903	39.480	40.250	563.335	82.874	3.039
1968 M.M.	43	1.431	510.733	269.531	785.596		494.007	109.853	603.590	282	3.397		11.318	493.621	29	1.186	40.536	55.880	502.570	118.142	3.165
												(2)	(3)								
1966 M.M.	46	1.500	465.298	283.631	757.663	1.468	461.970	118.145	580.115	1.306	5.142	11.595	1.342	442.680	117	1.010	44.278	66.884	567.906	188.726	3.524
1964 M.M.	49	1.581	520.196	283.612	805.311	840	485.178	131.291	616.429	1.759	5.640	13.562	1.833	483.554	83	1.209	48.159	59.535	607.935	161.531	3.998
1960 M.M.	51	1.668	614.508	198.909	811.811	23.059 (1)	502.323	124.770	627.093	7.803	5.048	12.564	2.973	468.291	612	1.234	49.007	82.218	616.699	269.877	3.821
1956 M.M.	44	1.530	601.931	196.725	784.875	10.068 (1)	492.676	113.195	605.871	7.228	5.154	15.538	5.003	433.510	1.918	2.200	56.636	76.498	591.305	87.108	4.137
1948 M.M.	47	1.510	454.585	157.180	611.765	—	373.488	95.619	469.107	—	—	—	—	—	—	—	—	—	—	—	4.863
1938 M.M.	56	1.669	399.063	158.763	557.826	—	—	—	366.543	—	—	—	—	—	—	—	—	—	—	—	4.126
1913 M.M.	—	2.898	233.858	149.621	383.479	—	—	—	293.583	—	—	—	—	—	—	—	—	—	—	—	4.229

N.B. — (1) En hl - In hl. — (2) Secteur domestique et artisanat - Huisbrand en kleinbedrijf. — (3) Administrations publiques - Openbare diensten. — (4) Chiffres indisponibles - Onbeschikbare cijfers.

BELGIQUE BELGIE — COKERIES COKESFABRIEKEN — OCTOBRE 1980 OKTOBER 1980

GENRE PERIODE / AARD PERIODE	Gaz - Gas 1.000 m³, 4.250 kcal, 0° C, 760 mm Hg: Production Produktie	Consomm. propre Eigen verbruik	Débit - Afzet: Synthèse Ammon. fabr.	Sidérurgie Staalnijverh.	Autres indus. Andere bedr.	Centrales élec. Elek. centrales	Sous-produits Bijprodukten (t): Goudron brut Ruwe teer	Ammoniaque Ammoniak	Benzol
Gaz de fours - Hoogovengas	181.936	90.619	—	52.718	6.052	32.563			
Autres - Andere	—	6.493	—	—	—	—			
Le Royaume - Het Rijk	181.936	97.112	—	52.718	6.052	32.563	14.048	2.652	3.642
1980 Septembre - September	174.406	92.331	—	50.490	9.889	29.451	13.514	2.379	3.466
Août - Augustus	196.070	103.050	—	59.414	13.046	31.031	14.833	2.734	3.606
1979 Octobre - Oktober	213.846	115.370	—	57.538	11.434	44.526	15.831	3.062	4.119
1979 M.M.	224.033	120.949	8	62.740	10.910	44.255	16.946	3.140	4.453
1974 M.M.	275.138	151.001	12.043	98.876	7.919	53.854	23.714	4.379	4.769
1970 M.M.	264.156	132.455	19.397	80.926			19.471	3.995	4.586
1969 M.M.	266.093	131.627	22.652	83.604			20.527	5.141	5.366
1968 M.M.	273.366	131.861	32.096	81.331			21.841	5.874	5.567
1966 M.M.	262.398	124.317	47.994	71.338			21.297	6.415	5.053
1964 M.M.	282.815	132.949	75.748	69.988			23.552	6.764	5.470
1960 M.M.	283.038	133.434	80.645	64.116			22.833	7.043	5.870
1956 M.M.	267.439	132.244	78.704	56.854			20.628	7.064	5.569
1948 M.M.	105.334	—	—	—			16.053	5.624	4.978
1938 M.M.	75.334	—	—	—			14.172	5.186	4.636

FABRIQUES D'AGGLOMERES AGGLOMERATENFABRIEKEN — OCTOBRE 1980 OKTOBER 1980

PERIODE PERIODE	Production - Produktie (t): Boulets Eierkolen	Briquettes Briketten	Total Totaal	Consommation propre Eigen verbruik (t)	Livraison au personnel Lever. aan het personeel (t)	Mat. prem. Grondstoffen (t): Charbon Steenkool	Brai Pek	Ventes et cessions Verkocht en afgestaan (t)	Stock fin du mois Voorraad einde maand (t)	Ouvriers occupés Tewerkgestelde arbeid
1980 Oct. - Okt.	5.020	440	5.460	85	85	4.129	448	5.563	672	15
Sept. - Sept.	9.495	230	9.725	315	75	8.518	797	9.236	961	24
Août - Aug.	5.361	900	6.261	149	65	4.584	512	5.943	863	22
1979 Oct. - Okt.	14.702	470	15.172	384	1.982	12.728	1.292	13.169	157	27
1979 M.M.	12.201	506	12.707	343	3.067	12.441	1.056	9.309	797	27
1974 M.M.	33.775	940	34.715	603	12.418	32.016	2.872	22.117	3.112	123
1970 M.M.	59.178	2.920	62.098	2.101	16.990	58.556	4.751	43.469	24.951	230
1969 M.M.	62.954	3.165	66.119	2.318	15.132	58.289	5.564	49.335	21.971	268
1968 M.M.	64.766	3.820	68.586	3.364	14.784	65.901	5.404	51.061	30.291	316
1966 M.M.	75.315	5.645	80.950	2.316	16.191	78.302	6.329	65.598	48.275	482
1964 M.M.	109.081	10.337	119.418	2.425	17.827	85.138	7.124	70.576	37.623	478
1960 M.M.	77.240	17.079	94.319	2.282	12.191	84.464	7.060	77.103	32.920	473
1956 M.M.	116.258	35.994	152.252	3.660	12.354	142.121	12.353	133.542	4.684	647
1948 M.M.	27.014	53.384	80.848	—	—	74.702	6.625	—	—	563
1938 M.M.	39.742	102.948	142.690	—	—	129.797	12.918	—	—	873
1913 M.M.	—	—	217.387	—	—	197.274	—	—	—	1.911

(1) Chiffres indisponibles — Onbeschikbare cijfers.

BELGIQUE
BELGIE

IMPORTATIONS-EXPORTATIONS
IN- EN UITVOER

OCTOBRE 1980
OKTOBER 1980

Importations - Invoer (t)

Pays d'origine Land van herkomst Période Periode Répartition Verdeling	Charbons Steenkolen	Cokes Cokes	Agglomérés Agglomeraten	Lignite Bruikolen
C.E.C.A. - E.G.K.S.				
Allem. Occ. - W. Duitsl.	188.336	29.229	4.307	3.577
France - Frankrijk	2.635	1.317	357	—
Pays-Bas - Nederland	19.226	19.084	—	—
Roy. Uni - Veren. Koninkrijk	13.284	4.714	—	—
Total - Totaal	223.481	54.344	4.664	3.577
PAYS TIERS - DERDE LANDEN				
E.U.A. - V.S.A.	257.757			
URSS - USSR	15.990			
Pologne - Polen	3.920			
Afrique du Sud - Zuid-Afrika	266.095			
Divers - Allerlei	4.957			
Total - Totaal	548.719	—	—	—
Ens. Oct. 1980 Samen Okt.	772.200	54.344	4.664	3.577
1980 Septembre - September	1.030.336	63.296	5.983	2.288
Août - Augustus	778.446	112.983	9.223	2.929
1979 Octobre - Oktober	1.017.242	125.803	8.982	2.806
1979 M.M.	801.861	117.351	10.483	2.703
Repartition - Verdeling :				
1) Sect. dom. - Huisel. sektor	103.103	507	4.664	3.577
2) Sect. ind. - Nijverheidssekt.	659.827	53.837	—	—
Réexportation - Wederuitvoer	3.617	—	—	—
Mouv. stocks - Schomm. voorr.	—441	—	—	—

Exportations - Uitvoer (t)

Destination Land van bestemming	Charbons Steenkolen	Cokes Cokes	Agglomérés Agglomeraten
C.E.C.A. - E.G.K.S.			
Allemagne Occ. - W. Duitsl.	32.000	10.423	—
France - Frankrijk	3.271	11.429	1.835
Luxembourg - Luxemburg	—	62	—
Pays-Bas - Nederland	175	2.223	—
Total - Totaal	35.446	24.137	1.835
PAYS TIERS - DERDE LANDEN			
E.U.A. - V.S.A.	—	—	—
Espagne - Spanje	—	—	—
Roumanie - Roemenië	—	—	—
Suède - Zweden	—	—	—
Divers - Allerlei	6.102	15.661	200
Total - Totaal	6.102	15.661	200
Ens. Oct. 1980 Samen Okt.	41.548	39.798	2.035
1980 Septembre - September	32.281	37.113	2.369
Août - Augustus	21.210	67.945	1.865
1979 Octobre - Oktober	25.994	57.695	4.577
1979 M.M.	24.253	70.188	4.571

(1) Dont 33 t d'agglomérés de houille importées. - Waarvan 33 t ingevoerde agglomeraten.

IJZER- EN STAALNIJVERHEID OCTOBRE-OKTOBER 1980

PRODUCTIE t

Produits finis - Afgewerkte produkten									Produits finals Verder bew. prod.		Ouvriers occupés Tewerkgestelde arbeiders
Fil machine Walsdraad	Tôles fortes Dikke platen ≥ 4,76 mm	Tôles moyennes Middeldikke platen 3 à 4,75 mm 3 tot 4,75 mm	Larges plats Universeel staal	Tôles fines noires Dunne platen niet-bekleed	Feuillards bandes à tubes Bandstaal Banden v. buizenstrip	Ronds et carrés pour tubes Rond en vierkant staafmat. voor buizen	Divers Allerlei	Total des produits finis Totaal der afgewerkte produkten	Tôles galv., plomb. et étamées Verzinkte, verlode en vertinde platen	Tubes d'acier Stalen buizen	
66.511	148.800	47.286	—	300.642	2.305	10.096	1.501	725.624	81.995	10.952	(1)
46.795	155.828	65.926	—	296.485	1.515	10.354	2.054	708.688	92.748	15.559	37.711
31.001	113.424	30.822	39	270.644	2.272	8.097	1.821	569.413	75.091	14.955	38.039
65.173	163.171	76.313	2	383.306	3.604	6.174	1.729	936.022	109.391	29.879	39.052
66.573	144.193	83.679	55	370.818	3.059	5.286	1.389	863.665	103.576	24.568	39.075
67.540	163.093	50.228	2.500	338.357	17.118	10.784	2.581	1.013.530	89.054	23.426	52.653
63.481	90.348	50.535	2.430	242.951	30.486	5.515	2.034	774.848	60.660	23.082	50.663
72.736	97.658	59.223	2.105	258.171	32.621	5.377	1.919	819.109	60.141	23.394	48.313
80.861	78.996	37.511	2.469	227.851	30.150	3.990	2.138	722.475	51.339	20.199	47.944
77.133	68.572	25.289	2.073	149.511	32.753	4.409	1.636	572.304	46.916	22.462	49.651
72.171	47.996	19.976	2.693	145.047	31.346	1.181	1.997	535.840	49.268	22.010	53.604
53.567	41.501	7.593	2.536	90.752	29.323	1.834	2.199	396.405	26.494	15.524	44.810
										(2)	
40.874	53.456	10.211	2.748	61.941	27.959	—	5.747	388.858	23.758	4.410	47.104
28.979	28.786	12.140	2.818	18.194	30.017	—	3.589	255.725	10.992	—	38.431
11.852	16.460	9.084	2.064	14.715	13.958	—	1.421	146.852	—	—	33.024
10.603	19.672	—	—	9.883	—	—	3.530	154.822	—	—	35.300

BELGIQUE
BELGIE

CARRIERES ET INDUSTRIES CONNEXES
GROEVEN EN AANVERWANTE NIJVERHEDEN

SEPTEMBRE 1980
SEPTEMBER 1980

Production Produktie	Unité - Eenheid	Sept. - Sept. 1980	Août - Aug. 1980	M.M. 1979	Sept. - Sept. 1979
Porphyre - Porfier :					
Moëllons - Breuksteen	t	1.437	4.122	11.033	3.975
Concassés - Puin	t	628.581	502.927	376.803	487.962
Petit granit - Hardsteen :					
Extrait - Ruw	m³	101.934	81.977	57.332	83.331
Scié - Gezaagd	m³	7.537	7.620	8.412	7.589
Façonné - Bewerkt	m³	1.028	915	727	993
Sous-prod. - Bijprodukten	m³	115.094	93.223	56.132	82.879
Marbre - Marmer :					
Blocs équarris - Blokken	m³	449	440	364	460
Tranches - Platen (20 mm)	m²	16.629	13.592	16.271	19.528
Moëllons et concassés - Breuksteen en puin	t	16	47	37	9
Bimbeloterie - Snuisterijen					
Grès - Zandsteen :					
Moëllons bruts - Breukst.	t	5.778	6.175	6.729	6.805
Concassés - Puin	t	257.789	236.709	204.896	287.490
Pavés et mosaïques - Straatsteen en mozaïek	t	2.547	2.221	1.890	2.651
Divers taillés - Diverse	t				
Sable - Zand :					
pr. métall. - vr. metaaln.	t	63.795	59.902	76.557	57.872
pr. verrerie - vr. glasfabr.	t	175.888	166.427	152.116	169.850
pr. constr. - vr. bouwbedr.	t	869.370	816.047	690.528	922.271
Divers - Allerlei	t	172.867	156.186	144.700	180.766
Produits de dragage - Prod. v. baggermolens :					
Gravier - Grind	t	452.112	392.172	414.728	652.690
Sable - Zand	t	83.381	90.878	87.466	182.763

Production Produktie	Unité - Eenheid	Sept. - Sept. 1980	Août - Aug. 1980	M.M. 1979	Sept. - Sept. 1979
Calcaires - Kalksteen	t	2.909.318	2.425.406	2.288.459	2.720.301
Chaux - Kalk	t	164.431	160.891	206.720	216.840
Carbonates naturels - Natuurcarbonaat	t	41.317	23.703	33.370	40.869
Dolomie - Dolomiet :					
crue - ruwe	t	290.199	255.035	279.522	297.758
frittée - witgeglocide	t	14.216	9.119	13.644	14.742
Plâtres - Pleisterkalk	t	16.430	19.841	16.078	17.278
Agglomérés de plâtre - Pleisterkalkagglomeraten	m³	2.088.526	2.331.334	1.556.993	1.918.683
Silex - Vuursteen :	t	10.879	9.685	187	268
Quartz et Quartzites - Kwarts en Kwartsiet	t	32.477	20.859	34.742	32.797
Argiles - Klei	t	6.626	8.107	5.391	8.122
Personnel - Personeel :					
Ouvriers occupés - Tewerkgestelde arbeiders		6.170	6.195	6.215	6.367

Fifth International Conference on Coal Research

Düsseldorf, September 1st-5th, 1980

The Fifth International Conference on Coal Research was held in Düsseldorf, on September 1st-5th, 1980. It was organized by the International Committee for Coal Research (ICCR). This Committee was set up in 1973 by the coal mining industries of Western Europe and of the United States of America ; later on, Australia, Canada, Japan and South Africa joined ICCR.

The programme of the Conference is given below. This issue of our Journal reproduces the papers presented by the General-Rapporteurs, by kind permission of the organizers.

The Proceedings of the Conference may be obtained shortly. The address is as follows : Dr. H.D. Schilling, Bergbau-Forschung GmbH, Postfach 13 01 40, 4300 Essen 13.

OPENING OF THE CONFERENCE

Chairman : Dr. E. Anderheggen, Chairman of the International Committee for Coal Research (ICCR).

Welcome address : Bergassessor F.C. Erasmus, Chairman of the Board of the Steinkohlenbergbauverein ; Member of the Board of Ruhrkohle AG.

Keynote address : Mr. R. Quenon, President of the Peabody Company, U.S.A.

Address : The coal research policy of the Federal Republic of Germany, by Mr. E. Stahl, Deputy Minister, Federal Ministry Research and Technology.

Research-Policy in Fields of Coal Mining, Beneficiation and Utilization

Chairman : Mr. C.E. Bagge, President of the National Coal Association ; Vice-Chairman of the International Committee for Coal Research (ICCR).

Speakers : Dr. U. Lantzke, Executive Director, International Energy Agency (IEA).
Dr. J. Gibson, Member of the Board, National Coal Board.
Dr. S. Gouse, Vice President and General Manager of the Mitre Corporation, USA.

Chairman : Mr. D.S. Carruthers, Chairman of the Pacific Coal Pty. Ltd., Australia.

Speaker : Prof. Dr. R. Jochimsen, Minister for Economy and Transport, Northrhine-Westphalia.

SESSION A1 : DEVELOPMENT TRENDS IN MINING TECHNIQUES

Chairman : Mr. L.J. Mills, Member of the Board, National Coal Board.

General-rapporteur : Assessor des Berfachs W. Brand, Managing Director of the Steinkohlenbergbauverein.

O.J. Richards (Australian Coal Industry Research Laboratories Ltd.) : Field trial of a new mining method for thick seam coal mining.
F. Benthaus (Steinkohlenbergbauverein) : Winning methods for extreme seam conditions - Techniques of today and of the future.
T. Nakata (Sumitomo-Akabira Coal Mine) : Technologies of deep mines safety under difficult conditions — spontaneous combustion and gas outburst — at Sumitomo-Akabira coal mine.
H. Wagner (Chamber of Mines of South Africa) : Longwall mining in shallow moderately thick South African coal seams.
W.M. Eaton (National Coal Board) : Selby — The way ahead.
P.G. Tregelles (National Coal Board) : Progress with mining research and development in the United Kingdom.
R.L. Marovelli (US Bureau of Mines), W.B. Schmidt (US Department of Energy) and J.J. Yancik (National Coal Association) : Overview on coal mining research progress in the USA in 1979 and 1980.

SESSION A2 : RESULTS OBTAINED FROM THE APPLICATION OF NEW COAL MINING TECHNIQUES

Chairman : Mr. G.T. Page, President of the Coal Association of Canada.

General-rapporteur : Dr. J.J. Yancik, Vice President, Research, US National Coal Association.

A.J. Hargraves (The Broken Hill Pty. Cy. Ltd.) : Seam gas problems and drainage in Australia.
R. Liégeois (Institut National des Industries Extractives) : The latest results of coal mining research in Belgium.
F.K. Bassier (Bergwerk Walsum) : Viability and risk assessment problems with increasing winning concentration in coal mining.
H. Nehring (Rheinische Braunkohlenwerke AG) : Modern opencast mine surveying by use of photogrammetry.
J. Daret (Houillères de Provence) : Type-mounted transport system at the Houillères de Provence (France).
J.P. Dejean et J.F. Raffoux (Centre d'Etudes et Recherches des Charbonnages de France) : Planning and data processing in collieries operations.
V.M. Thomas (Mining Research and Development Establishment, National Coal Board) : Colliery applications of Minos : A standard computer system.
R.E. Samples (Consolidation Coal Company, USA) : Hydraulic transportation of coarse coal at the Loveridge mine.

SESSION B : COAL GASIFICATION AND LIQUEFACTION

Chairman : Dr. P. Speich, Member of the Board of the Rheinische Braunkohlenwerke AG, Federal Republic of Germany.

General-rapporteur : Dr. A. Brink, Research Manager Sasol, Republic of South Africa.

I.W. Smith and A.V. Bradshaw (CSIRO Institute of Earth Resources) : The development of flash pyrolysis in Australia.
R. Cyprès (Université Libre de Bruxelles, Belgium) : Preliminary hydropyrolysis of coal to be burned in power-plants.
W. Adlhoch and K.A. Theis (Rheinische Braunkohlenwerke AG, Federal Republic of Germany) : Generation of synthesis gas and reduction gas by gasifying brown coal using the high temperature Winkler process.

R. Specks (Ruhrkohle Öl und Gas GmbH) : Gasification and hydrogenation of coal - Status and prospects.
S. Sato (The Coal Mining Research Centre) : Research and development of fluidized bed coal gasification for power generation in Japan.
W.J. Sander (Uranium Enrichment Corporation of South Africa Ltd.) and J. Dekker (Setrachem) : A review of research and development on coal conversion in the Republic of South Africa.
B. Robson (Coal Research Establishment, National Coal Board) : The NCB coal gasification system for power generation.
G. Fumich (US Department of Energy) and H. Perry (US Resources for the Future) : Advance in synthetic fuels technology : progress in USA/DOE programs.

SESSION C : COAL PREPARATION

Chairman : Mr. A.H. Hams, General Manager of the Australian Coal Industry Research Laboratories Ltd.

General-rapporteur : Mr. A.W. Deurbrouck, Chief, Coal Preparation Division, US Department of Energy.

G.L. Lyman (University of Queensland) and R.J. Chesher (Central Queensland Coal Associates, Australia) : On-stream analysis for ash in coal slurries.
H. Whaley, I.C.G. Ogle, D.A. Reeve (Department of Energy, Mines and Resources, Canada) and C.E. Capes (National Research Council of Canada) : Coal-oil mixture research and development in Canada.
W.P. Bethe (Ruhrkohle AG) : Impact of changing raw coal properties and market trends on coal preparation.
J. Kato (Mitsui Coal Mining Co., Ltd., Japan) : Application of pressure flotation for waste water treatment at Mitsui Ashibetsu coal mine.
P.J.F. Fourie (Fuel Research Institute of South Africa) : Dense medium beneficiation of minus 0.5 mm coal in the Republic of South Africa.
P. Cammack (National Coal Board) : A policy for research and development in the preparation of coal for the new utilization processes.
T.D. Wheelock (Iowa State University) : Status of chemical coal cleaning processes.

SESSION D : COAL UTILIZATION

Chairman : Mr. S. Hozumi, Director, The Coal Mining Research Centre, Japan.

General-rapporteur : Dr. A.D. Dainton, Director, Coal Research Establishment, National Coal Board, United Kingdom.

L.J. Garner and L.J. Packer (Victorian Brown Coal Council, Australia) : High grade granular activated carbons from Victorian brown coal.
M. Ternan, L.P. Mysak, D.K. Faurschou and D.A. Reeve (Department of Energy, Mines and Resources, Canada) : Coal as an energy source in recovery and upgrading of Canadian heavy oils and tar sands.
K. Bothe (Saarberg Fernwärme GmbH) : Present status and development of district heating in the Federal Republic of Germany with particular emphasis on the use of pit coal.
R. Chauvin (Cerchar, France) : The French cement-manufacturing industry's return to coal.
T. Kimura, T. Nakabayashi and K. Mouri (Electric Power Development Co., Ltd.) : Overall flue gas treatment technology from coal-fired power plants in Japan.
W.G. Kaye (Coal Research Establishment, National Coal Board) : Commercial exploitation of fluidized combustion on the industrial market.
R.E. Balzhiser and R. Loth (Electric Power Research Institute USA) : EPRI research and development on coal based power generation.
G. Voelker and S. Freedman (US Department of Energy) : Status report on coal-oil mixtures and fluidized bed research, development and demonstration.

Development trends in mining techniques

Wilhelm BRAND *

1. *MINING TECHNOLOGY INFLUENTIAL PARAMETER ON THE AVAILABILITY OF COAL*

Today nobody will have any serious doubts about the necessity of going back to coal as an energy source and energy raw material in order to ensure future world energy supplies. Therefore, experts are all the more concerned with the question where and to what extent coal is available at acceptable production cost and which are the most promising conversion methods in view of the increasing scarcity of mineral oil and natural gas.

One has to bear in mind, however, that the availability of coal is not a static factor depending on the quantity of reserves or the quality of a deposit alone, i.e. on natural and unvariable factors. There is rather a number of dynamic factors to be taken into account which can be influenced. The most important influential factors are :

1) *The infrastructure,* i.e. the conditioning of transport facilities for coal sales, but also of the means of supply and disposal for a mine,
2) *The labour situation,* i.e. availability or recruitment as well as the professional education of miners and mining engineers, a problem prevailing specifically in the developing countries,
3) *State and potentials of improvement of mining technology,* especially of mining process technology.
These are in my opinion the most important influential factors bearing on the availability of coal.

Some examples : poor deposits or deposits high in sulphur may become economic thanks to novel preparation techniques with improved cutting points and better yields. Or coal deposits in *extremely unfavourable* geological conditions, such as very thin or thick or considerably dipping seams, seams at great depths and high rock temperature, may become recoverable thanks to improved process techniques.

Finally, the availability of coal also implies a time component, for the question is not only how much coal will be available, but also when and how soon additional coal will become available. Higher speeds when sinking shafts or driving roadways may e.g. critically bear on the time factor.

It has also to be recognized that the further improvement of mining technology as well as the outcome of research and development activities will critically influence the proportion up to which coal can contribute to cover future energy demand. Unless mining technologies are developed rather soon, one cannot expect that sufficient coal volumes will be produced to meet the world coal consumption of 6 to 7 billion tce (World Coal Study WOCOL of May 1980) forecast for the year 2000.

2. *DEVELOPMENT TRENDS IN THE COAL MINING INDUSTRY*

In view of the importance of the subject it is an honour to me having been appointed, as general rapporteur, to give a comprehensive view on the development trends in mining technology. Without prejudice to the papers submitted by the authors, I'd like to begin with some remarks on opencast mining and borehole mining.

2.1. *Opencast Mining*

Presently, more than 90 % of world brown coal production stems from opencast mines ; the relevant proportion for hard coal is between 20 and 30 %. Today brown coal opencast mines with loose rock overburden reach depths down to 550 m. Hard coal producing opencast mines, on the other hand, do not reach further down than some 100 m, due to the

* Assessor des Bergfachs, Geschäftsführer, Steinkohlenbergbauverein, Franz-Fischer-Weg 61, D-4300 Essen - Kray.

mostly much thinner seams and more solid overburden.

In the course of further technical improvement opencast mining will be able to go down to greater depths than were hitherto attainable. The production equipment for discontinuous operation, such as bucket elevators or drags in conjunction with train or truck transport, are continuously being improved and enlarged. Specific potentials are seen in an extended application of continuously operating techniques, such as by bucket wheel or bucket chain excavators with belt conveying systems. The trend also goes towards a concentration of production on very big opencast mining complexes, allowing reduction of costs. Optimization of equipment systems will be another means of economical improvement. The present system is able to yield 240 000 m^3/day, a performance rate which, however, will remain the upper limit for the time being.

2.2. *Drill-Hole Mining*

For extracting coal from deposits which with present conventional methods are still inaccessible, the mining industry is working on the development and trial of drill-hole techniques. As to the present state of the art, one may say that, in general, the gasification of thick near to the surface seams containing specifically reactive coal has proven feasible. There is, however, no practical experience so far as to the gasification of hard coal seams at greater depths.

Consideration in respect of extracting coal by micro-organisms or in situ liquefaction by adequate solvents, are still in an initial state. There are so far no footholds for an implementation of these techniques, so that they cannot be considered in the nearer future.

2.3. *Underground Mining*

As far as the development trends in deep mining are concerned, I can base on the seven papers which were submitted on the subject.

Even though, for reasons of easier accessibility and lower cost, the proportion of coal coming from open-cast mines will continue to increase worldwide in a near future, it is to be expected nevertheless that due to the location of coal reserves, the production will, in the longer run, shift more and more to underground mining. According to the publication « coal resources » on the 10th World Energy Conference in Istanbul in 1977, only 20 % of the 663 billion t recoverable at the present state of the art can be extracted from open-cast mines, whereas about 80 % shall have to be extracted by underground mining. Improving underground mining techniques, therefore, is considered to be of critical importance. This is adequately reflected by the fact that all the papers submitted for this conference exclusively deal with underground mining.

2.3.1. *Research and Development Programs of Important Coal Producing Countries*

The programs established by the top coal producing countries provide the broadest documentation on the very diversified field of development activities in mining technology. Two papers have been submitted which reflect the present state of research and development work in United Kingdom and in the United States of America ; the R + D program of the United Kingdom is centered on short- and medium-term longwall mining, whereas in the USA stall working or board and pillar working are still predominant and longwall mining becomes increasingly important along with greater depths.

2.3.1.1. *Research and Development in the United Kingdom*

Mr. P. Tregelles, director of the Mining Research and Development Establishment (MRDE), submitted a report on the R + D program of his institute. It is known that in British deep mines the normal winning method is by advancing longwall faces equipped with shearer loaders. Short-term work on performance improvement means here work on the degree of utilization of coal winning machinery which at present is of approximately 50 %.

The R + D activities within the short-term program concentrate on increased functional reliability and computerization. A sophisticated measuring and adjusting technology backed by micro-processors will enable better control of operations. Via an evaluation of operational data, the mine management will be supplied with the necessary decision-making aids ; this is also the transitional state to a later automation. The short-term goal is a reliable and automized system technology. There is also a close cooperation in this field with the Federal Republic of Germany.

The medium-term research and development projects of MRDE deal with problems supposed to become key problems as soon as face outputs will be increased considerably. The medium-term program includes 5 main fields of activity :

1) Novel-type automatic vertical and horizontal steering of winning machines ;

2) Exploration ahead of coal faces, both by seismic methods covering distances of 300 m and more as well as by longhole drilling for the location of geological faults ;

3) Testing of tunneling machines ;

4) Improvement of underground transport by trackless vehicles as well as by speeding up and enhancing the safety of train systems ;

5) Environment.

At this juncture, depth problems e.g. increasing rock pressure, higher temperatures and increased fire damp emissions are dealt with. Secondly, depth-independent problems such as dust and noise in underground mines are being studied.

The long-term MRDE program covering a period of 20 to 30 years, deals with possible alternatives to present-day longwall mining. To the effect, studies on the feasibility and the economics of in situ coal conversion have already been started. Subjects of these studies are the in situ gasification of coal deposits under the sea as well as feasibility of micro-biological degradation of coal.

One of the working teams has investigated the so-called « Telechiric » concept, i.e. a system of mobile pieces of machinery equipped with « hands » and « eyes » operated from the surface. A first design target is to develop to demonstration maturity a simple « Telechiric » system which is to be put to work in those underground areas where action would be too hazardous for humans.

2.3.1.2. *Research and Development in the United States of America*

The predominant mining method in the USA is stall or board and pillar mining which is economical down to depths of approximately 400 m. More than 90 % of the coal from deep mines is produced by this method. Thus, optimization of continuous mining as the most important winning method in stall or board and pillar mining as well as the full utilization of the development potential of the continuous miner as winning equipment, are the main development targets. In a paper jointly prepared by Mr. Marovelli, Mr. Schmidt and Dr. Yancik, examples of these activities are given, e.g. the development of a combined continuous miner/powered support-setting/roof bolting system as well as the improvement of cabins and canopy designs for the continuous miner.

Special attention is given to the further improvement of longwall mining, and this also for reasons of safety. Presently there are approximately 100 active longwall faces in the USA. Research and development work is centered on the adaptation or development of components to suit the conditions prevailing in the USA. Trials are in progress for mining by longwall methods seams of 3 m thickness, seams less than 1 m thick, inclined seams and seams more than 6 m thick at depths down to 300 m. These activities are backed by the Mining Process Center near Pittsburgh, Pennsylvania, recently established by the Department of Energy and where trials are run specifically on winning machinery and conveying means and where a test rig for mine support was installed. It will certainly be interesting to compare the results obtained in these difficult geological conditions with the experience gained in the Western European hard coal mining industry.

The research and development work on an improvement of longwall mining deployed by the Department of Energy is backed up by the mining industry. The Bituminous Coal Research Inc. (BCR), sponsored by the National Coal Association (NCA), has a.o. carried out a study on the equipment and operation of any and all longwall faces in the USA. Further points of emphasis of the R + D work by BCR are the development of mine monitoring and communication systems as well as the improvement of dust suppression technologies. Mining companies are planning an expansion of their R + D activities.

Let me still mention another important R + D project within the DOE program, i.e. testing of the Robbins shaft boring machine designed for boring shaft diameters of up to 7.0 m at a rate of 10 to 15 m/day. The target of the project is to accelerate and improve shaft sinking operations. During the trials the mechanical systems of debris dry clearance turned out to be unreliable so that for further trials a hydraulic flushing system is scheduled to be used.

The paper submitted by the United States of America reports furthermore on increased efforts in the field of accident prevention, mine disaster prevention and on health protection for miners. The Health and Safety Department of Bureau of Mines is in charge of these activities. This department is also responsible for the « environmental research » program which deals with minimizing subsequent mining damages, e.g. land reclamation, a field of activities of worldwide increasing significance.

2.3.1.3. *Financial Expenditures*

The amount of research and development expenditures in the fields of mining technology and safety are often considered to be an indicator for the intensity of development efforts ; they clearly show a rising tendency.

The research and development expenditures for mining technology and safety in British hard coal mining e.g. have increased from 110 million DM in 1979 to 120 million DM in 1980 which corresponds to an investment of DM 1 per ton of saleable output. Sharply 20 % of this amount goes into safety and 80 % into mining technology.

As far as the German hard coal mining is concerned, the relevant expenditures rose from 310 mil-

lion DM in 1978 to 324 million DM in 1980. This is an expenditure of DM 3.70 per ton of saleable output. The safety in mines accounts for about one third, whereas two thirds go into mining technology.

One has to bear in mind, however, that these figures cannot be compared due to differing methods of determination. Nonetheless there is a clear tendency towards rising financial investment in the Federal Republic of Germany as well as in the United States of America. Furthermore, it becomes obvious that both American and German research and development efforts are increasingly and considerably subsidized by the State. This reflects the recognition that coal will in the future play a key role in national economic growth rates.

2.3.2. *Novel Winning Techniques aiming at Minimizing Mining Losses*

One of the crucial problems of the future will be how to improve the rate of extraction of coal deposits. When comparing longwall mining to stall or board and pillar mining, longwall mining appears to be more economic since it enables to extract approximately 70 to 85 % of the recoverable deposit, against 40 to 60 % for stall or board and pillar mining. Nevertheless, sometimes high mining losses have to be coped with even in longwall mining, specifically in faulted conditions, due to the advanced state of mechanization. Moreover, the highly mechanized but not very adaptable equipment only admits mining favourable portions of the deposit.

To increase the production yield from underground deposits which at present may average a worldwide 50 % of recoverable reserves, in future also those portions of deposits have to be considered, and if possible to be completely extracted, which are difficult to recover. In the past these portions were often enough sacrified to « negative rationalization » due to the tough competition in the energy market. Three papers deal with the development of new winning methods for difficult geological conditions.

2.3.2.1. *Winning Methods for Extreme Seam Conditions*

The report submitted by Dr. F. Benthaus, executive board member of Steinkohlenbergbauverein, deals with the efforts of the German hard coal mining to develop efficient winning techniques for difficult seam conditions as prevailing in case of

thin seams,
thick seams,
strongly inclined seams and
faulty seams.

« Thin seams » are defined in present-day German hard coal mining as seams of 1.3 m thickness or less. The thinnest seam worked at present is approx. 0.8 thick. When mining thin seams, previous emphasis was laid on improved efficiency and reliability of plough systems, furthermore on the adaptation of shield support to thin seams and on the development of low-profile shearer loaders. The targets set for the future are the development of efficient machines for cutting rise headings in thin seams, especially in those difficult to work, as well as a manless winning method.

The development of shield support systems enabled reliable roof control also in high faces. A system combining shield support, heavy-duty scraper conveyor and 300 kW shearer loaders is present-day standard equipment for mining seams up to 4.5 m thickness. Further progress was achieved in particular by cutting gateroads in line with the face (fig. 1) as well as by a novel pneumatic stowing technique integrated into the powered support.

Improved roof and coal face control e.g. by early-bearing solid stowing and the use of cutting-disc shearer-loaders (fig. 2) which by means of cutting with diagonally positioned drum avoid any uncontrolled coal fall from the face, are given priority for the future.

When developing winning techniques for steep seams, best results were obtained to the present by adapting winning methods originally designed for flat seams to seams inclined by as much as 60 degrees. Here again, mostly heavy-duty shearer-loaders and a modified shield support system are used. In addition, prop-free winning methods, in part with solid stowing, are under development. The increased performance of coal winning machinery enables easier cutting through geological faults than in the past. The flexibility of shield support systems and coal winning machinery, however, needs still to be improved. Special equipment for cutting through faults is therefore supposed to be developed.

As shown by these examples, German hard coal mining made considerable efforts for recovering also coal reserves in extreme seam conditions. A cost-effective extraction of these reserves could, among other means, delay to some extent the economically disadvantageous increase of depths — presently at a rate of approximately 10 m per year — and thus enable better utilization of the capitals invested in underground operations.

2.3.2.2. *Novel Method of Mining Thick Coal Seams*

The paper submitted by Mr. O. Richards, head of the Mining Research Institute with Coal Industry Research Laboratories, Australia, also deals with the

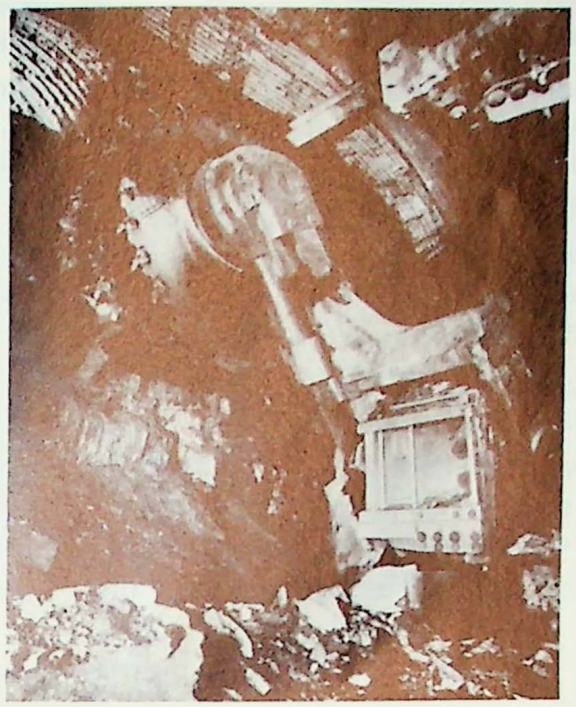

Fig. 1 — Cutting the gate section with a drum shearer-loader

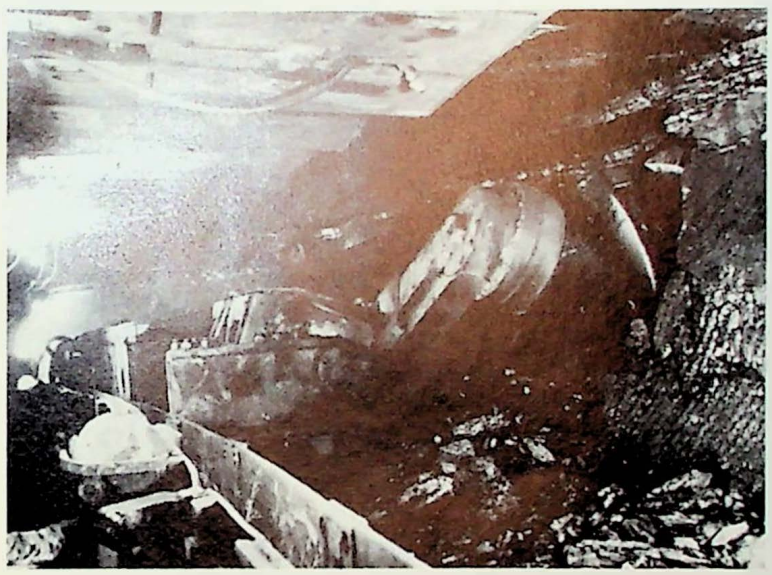

Fig. 2 — Cutting disk loader

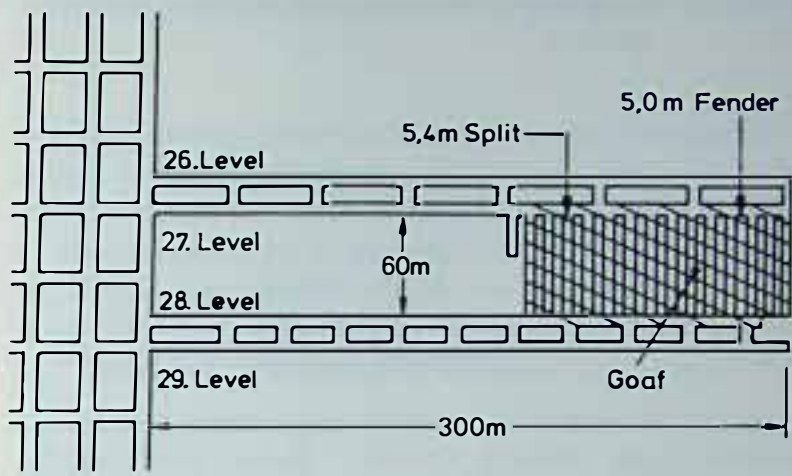

Fig. 3 — Plan of development and extraction of top of coal seam

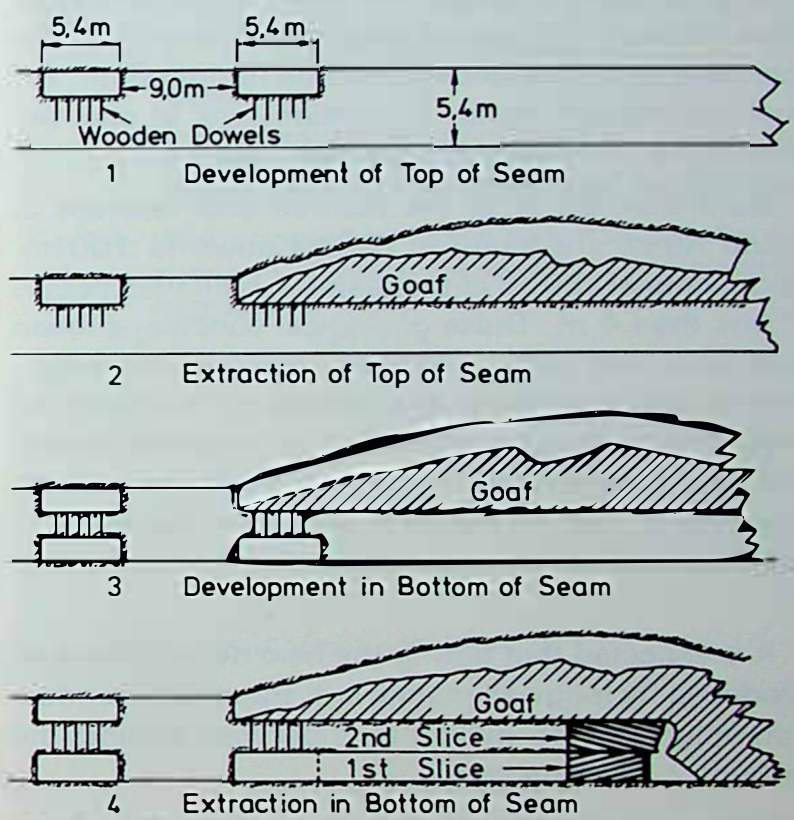

Fig. 4 — Sections of development and extraction sequence

problems of mining a coal seam difficult to be worked. One subject of his paper is the development of an underground mining method for the almost complete extraction of a 5.4 m thick coal seam.

94 % of the production from Australian deep mines is mined by means of continuous miners, against 6 % by shearer loaders from longwall faces. The recovery factor with present mining techniques reads generally less than 50 % for thick seams. Due to the wide-spread use of the continuous miner, this winning machine was selected for the new method. The seam located at a depth of 150 m is subdivided into three slices of 1.8 m thickness each and mined in following phases (fig. 3) :

1) Drivage of two access roadways in the top slice of 1.8 m thickness by continuous miner, 300 m apart from each other. The cross section of the roadways is of 5.4 × 1.8 m. A mining panel is then formed by driving roadway splits every 60 m to give a panel of 300 × 60 m.

2) In a second step the top slice is mined over the whole width of 300 m and length of 60 m (fig. 4). The roof support consists of W steel profiles secured by at least four resin-set roof bolts.

3) In a third step the bottom slice is developed according to the same pattern as the top slice.

4) The 1.8 m thick bottom slice is then mined directly underneath the upper part. The bench in between is finally mined by the retreating continuous miner, the boom of which reaches up to a height of 3.60 m.

According to the present trial state the complete recovery of the top slice is provided by the remotely controlled travel of the continuous miner. Furthermore, the introduction of resin-set wooden dowels into the floor for stabilization of the middle bench turned out to be technically feasible.

2.3.2.3. *Longwall Mining instead of Room and Pillar Mining*

Increased coal consumption necessitated a revision of mining techniques also in the Republic of South Africa for assuring the best possible utilization of coal reserves. On this background it was considered to introduce longwall mining for obtaining a higher recovery factor of the reserves than with room and pillar mining which previously was exclusive practice.

In the course of the gone-by decade the South African coal mining industry faced considerably changing demands. Among the many factors contributing to these changes the most important ones were the rapid increase of electricity demand and the intention to reduce dependency on imported oil. For coal liquefaction alone, 27 million tons of coal per annum will be required in the near future.

More than 95 % of the assured coal reserves in South Africa are found in depths down to 200 m. Approximately 50 % of the seams exhibit thicknesses of less than 4 m. These geological conditions mean that open-cast mining as well as room and pillar mining are competing alternatives to longwall mining. The main application field for longwall mining will be the working of moderately thick seams more than 100 m deep as well as of seams the roof strata of which do not permit any room and pillar mining (fig. 5).

It is expected that during the next decade the coal produced by longwall mining will stand for a production volume of 35 million tons per year against the present 2.5 million tons.

The contribution by Mr. H. Wagner, director of the Mining Technology Department with the Chamber of Mines in South Africa, deals with the introduction of longwall mining for shallow seams of moderate thickness.

It was found out that, in order to reach a degree of efficiency comparable to the one of room and pillar mining, a South African longwall face of 200 m length in a 2.5 to 3.0 m thick seam, should yield a production of 35,000 tons per week. This means a daily face advance of approximately 8 m which can be achieved most reliably by retreat mining.

In South Africa the panel length for longwall faces ranges between 1000 and 2500 m. Between the worked-out panels 30 to 100 m wide pillars are left for protecting the gateroads (fig. 6).

Face length and pillar width are determined by rock-mechanical criteria. Experience up to present has shown that a pillar width of 30 m is sufficient for longwall mining at shallow depths whereas with longwall mining at 200 m depth pillars of at least 50 m width are required. This means, however, a reduced recovery factor for the deposit so that considerations are underway to leave no more pillars at all.

The strength of the coal and lacking cleavage make coal winning difficult. For this reason double-drum shearer loaders with a rated capacity of up to 750 kW were required (fig. 7).

Such high rating is also necessary because of lacking strata pressure and has led to a substantial increase of the weekly coal production.

The following problems are encountered when introducing longwall mining :

1) By leaving pillars for the protection of gateroads, surface subsidence is irregular which often results in the loss of valuable agricultural land.

2) Disturbance of the ground water table occurs as well as

3) water inrushes into the underground workings.

In spite of these difficult conditions longwall mining up to the present proved to be a technical success in moderately thick seams. Based on the encouraging results this method will gain increasing importance in South Africa. Capital-intensive longwall mining, however, requires high face outputs of more than 100 000 tons per month in order to compete with room and pillar mining in South African geological conditions. Due to the aforementioned high capital-intensity will arise the economical necessity also in South Africa — similarly to the West European hard coal mining — to concentrate the production on a few faces.

2.3.3. *Mine Safety in Spite of Difficult Conditions*

Notwithstanding the efforts to make future mining efficient and economical, the safety aspect must not be neglected.

Mr. T. Nakata submitted a paper on the safety measures taken at the Sumitomo-Akabira colliery situated in the center of Hokkaido Isle, Japan.

The particular problems prevailing at Sumitomo-Akabira colliery were frequent mine fires caused by spontaneous combustion as well as gas outbursts which repeatedly constituted a serious hazard to further production.

In the recent years, intensive research and development work enabled development and trial of effective counter-measures which resulted in a considerably reduced number of mine fires caused by spontaneous ignition and of gas outbursts, even though mining depth has been increasing ever since.

The following measures were taken for fighting fires caused by spontaneous ignition :

1) Improvement of layouts, mining techniques (complete recovery) and ventilation.

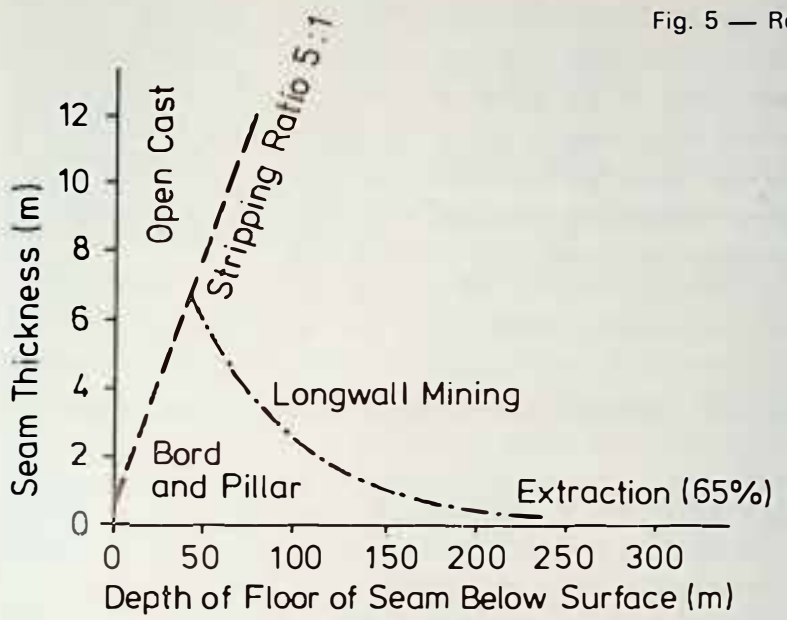

Fig. 5 — Relationship between seam thickness, mining depth, and method of mining

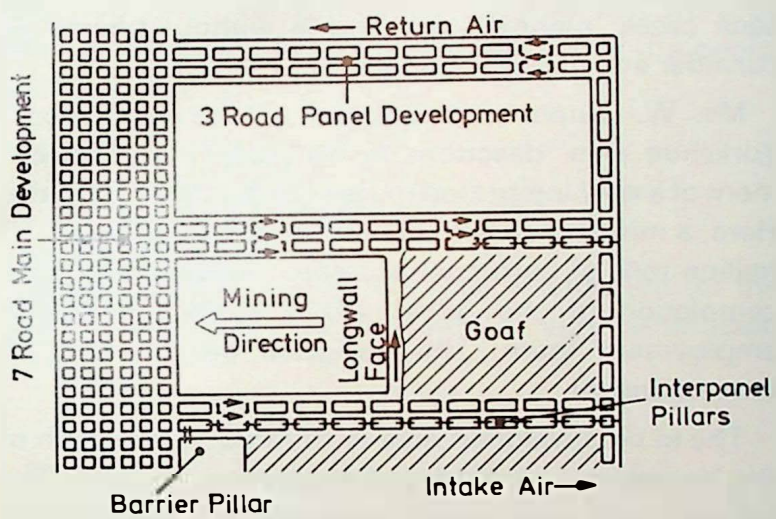

Fig. 6 — Typical longwall layout in South Africa

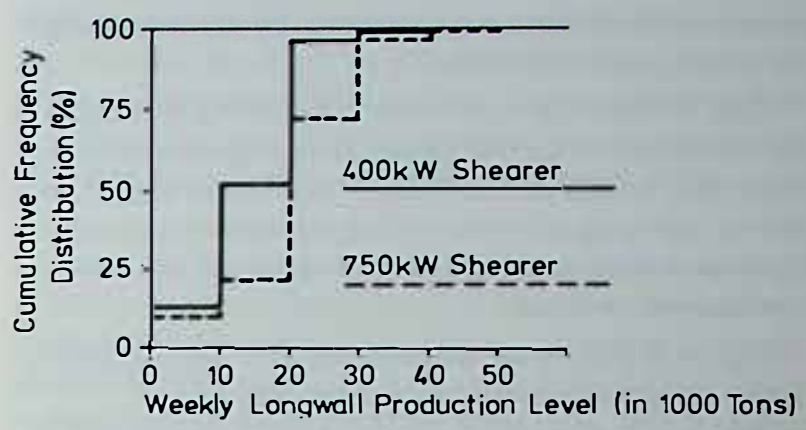

Fig. 7 — Weekly longwall production rates at Sigma colliery as a result of increasing the power of the double-ended ranging drum shearer

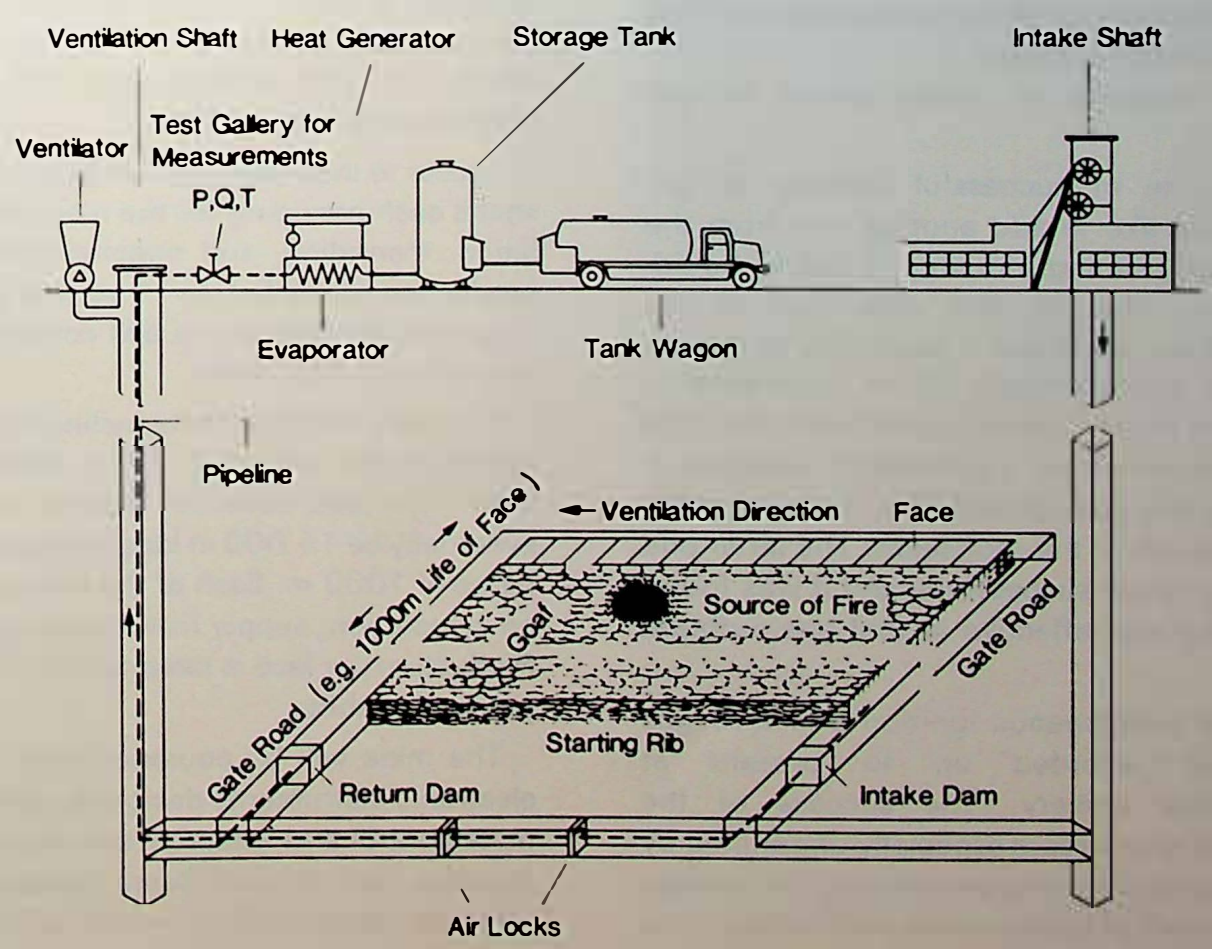

Fig. 8 — Schematic diagram of the inertization process

2) Basic research on spontaneous combustion and investigations on gases and odours produced in the course of a developing mine fire.
3) Installation of a monitoring system for the detection of spontaneous combustion fires in an early phase. Detection and monitoring of the main indicator gases CO and BTX (benzene, toluene. xylol) is assured by the tube bundle system.
4) Counter-measures in an early phase of spontaneous combustion. e.g. stowing by fly-ash sludge, damming, and extinction.

Also in West German hard coal mining fires caused by spontaneous ignition are a recurring phenomenon. They do, however, no longer represent any critical risk for carrying on with mining operations ever since. German mines are equipped for applying the nitrogen inertization process.

Figure 8 shows an arrangement of the inertization plant components used in our country.

44 cases are known up to present where the fire could be confined by the use of nitrogen in a way that operations could be carried on. In some cases even open fires could be extinguished. Inertization is particularly economical in those cases where, after isolation of a mine area at fire, the workings in question are to be recommissioned within short. In some cases rapid fire fighting by means of nitrogen enables the prompt recommissioning of entire mine panels.

The following counter-measures against gas outbursts are taken at Sumitomo-Akabira colliery :

1) Destressing drilling in seam ; one borehole of 50 mm or 70 mm diameter per square meter.
2) Large diameter borings of diameters between 150 and 400 mm in road headings.
3) Destressing blasting in zones prone to gas outbursts.

To this example of successful fighting of gas outbursts I would like to add another one from the German hard coal mining industry. It has to be admitted, however, that in this case, i.e. at the Ibbenbüren colliery, there was a possibility of mining a seam located approximately 25 m underneath a seam which was highly prone to gas outbursts. The latter seam was mined as a protection measure in order to reduce the gas content and, consequently, the gas outburst risk of the roof seam. The latter one meanwhile was mined successfully and it was found that undermining was effective in that gas outburst did not recur.

104 cases of spontaneous ignition and 249 gas outbursts were recorded up to present at Sumitomo-Akabira colliery. The success of the above-described measures is especially underlined by the fact that in spite of mining penetrating into greater depths, the number of spontaneous combustion fires and gas outbursts is clearly decreasing.

Apart from counter-measures against depth-dependent risks and against dust, increased attention will need to be given in the future to making jobs more attractive in order to enable recruitment of a labour required for production increase. In particular, air-conditioning creating acceptable work conditions underground will play a major role.

2.3.4. *Development of New Mining Compounds*

A particularly attractive, but, unfortunately, rather unfrequent task for a mining engineer is the planning and construction of a new mine. This is, indeed, an opportunity of taking into account the most recent findings of mining technology and fitting them into the general design and layout of the new mine. In such cases, planning is possible without having to consider any existing works.

Mr. W. Eaton, area director of the NCB North Yorkshire area, describes in his report the development of a new integrated mine in Selby, Great Britain. Here, a mine for an annual production capacity of 10 million tons of hard coal is created from scratch. On completion of the mine, 4000 miners will find employment there. The designed output is 12.5 tons/manshift.

The to be developed area is situated in the north of the Yorkshire coal field and comprises 15 km². The relevant coal reserves are assessed to 2 billion tons. The Barnley seam which is to be worked first and the thickness of which ranges between 2.0 and 3.3 m, contains 600 million tons, approximately 40 % of which, i.e. 250 million tons, are deemed to be economically recoverable.

Access to the seams will be assured by five pairs of shafts each providing for the respective panels ventilation, manriding, and material supplies. The total production will be fed via 11 vertical bunkers of 1000 tons capacity each to the belt conveyor of one of the two main haulage drifts.

The main haulage drifts inclined by 14° will reach approximately down to 70 m below the Barnsley seam. The belt conveyor system of each drift will eventually be 15 000 m long and extend over a depth range of 1000 m. Each of the five pairs of shaft will, on completion, supply five retreating longwall faces. Production per face is rated to 2000 tons/day in two production shifts.

The mine will be equipped with the most recent electronic instruments designed especially for the remote control and monitoring in coal mines. For this purpose, National Coal Board developed the standard computer system Minos which performs the following tasks :

monitoring of the production stream,
transmission of alarm signals,
bunker control and bunker administration,
monitoring of coal winning,
monitoring of environmental factors (e.g. dust),
monitoring of ventilation and
management information.

Planning work for the Selby project started in 1974. In 1983, i.e. 10 years later, production is scheduled to start. The full production of 10 million tons per year is scheduled to be achieved in 1988, i.e. 14 years after the planning work was initiated. These are the normal time spans to be expected when developing new mines in geological conditions as prevailing in Europe.

In cases where it is possible (e.g. in West German hard coal mining) to develop new panels by extensions to existing collieries, the construction time required until full production is achieved may be shorter, i.e. some 10 years, depending on the geological conditions.

3. *CONCLUSIONS*

Following the energy forecasts established for the year 2000, coal has to fulfill a very ambitious, perhaps a too ambitious, task, i.e. a triplication of coal production within as little as 20 years.

It is a fact that the availability of these enormous coal quantities will depend, among others, on a rapid progress of mining technology. Among technological concepts, those underground mining techniques have to be given preference which enable rapid access to deposits and extraction of the coal even in difficult geological conditions, in order to utilize existing reserves as much as possible. Judging from the papers submitted on the subject, it may be concluded that this approach is being pursued very aggressively and that major progress has already been achieved.

There is, however, no doubt that research and development activities will have to be still extended and backed by still higher financial investments. The necessary funds provided for this purpose, if need be by making use of governmental subsidies, are a useful contribution to securing future energy supplies. By the same token, the effectiveness of research and development may still be enhanced by further intensifying of international cooperation and exchange of knowledge accross the borders, which is one of the targets of the International Committee for Coal Research.

Results Obtained from the Application of New Coal Mining Techniques

Dr. Joseph J. YANCIK *

INTRODUCTION

The focus of this second session on coal mining is aimed at the identification of results achieved with the introduction of improved or new technologies into routine production operations. Also included are results from the field testing of commercial prototypes under mine operating conditions.

There are eight papers in this session with contributions from Australia, Belgium, United Kingdom, the United States and two each from the Federal Republic of Germany and France. The contributions which these papers make in the advancement of coal mining technology are a reflection of the extensive experience and expertise of the authors and the institutions they represent.

These eight papers can be classified generally into two categories. Six of the papers present results achieved with the application of new technologies in coal mining operations. These include the use of new or specialized equipment and techniques involving diesel-powered vehicular transportation, predrainage of coal seam gas, methane emission control techniques, computerized mine-wide monitoring and control systems, electro-optical surveying and photogrammetry, and hydraulic transportation of raw coal from face to surface. Two papers discuss the benefits and associated considerations realized when new technologies and techniques have been adopted. One paper describes the methodology for computer storage and analysis of geotechnical data and the use of these data for real time (next production shift) mine planning and production scheduling. The other paper analyzes the effects that high production face systems have on the economic viability of coal mining operations.

The format used in my report consists of a brief summary of each paper, followed by personal comments on the most relevant aspect of the technology progress described in the paper. My remarks are offered as a means for the conference delegates to compare my views with their own assessment of the technical progress made and to stimulate the discussions with the authors.

HARGRAVES A.J., « SEAM GAS PROBLEMS AND DRAINAGE IN AUSTRALIA «

Hargraves' paper is an excellent summary of the present problems encountered in Australia by excessive gas in coal seams. These problems are expected to increase in severity as mining extends to the deeper seams in the Sydney and Bowen basins. These coal basins in eastern Australia, unlike most major coal basins in the world, have extensive concentrations of carbon dioxide gas coexisting with methane gas. This gas combination requires special safety and operating precautions and complicates the development of coal bed drainage techniques before, during and after mining.

Although relatively successful methane/carbon dioxide control techniques have been developed by the Poles for the lower Silesian coal fields, and by the French for the Cevennes field, the straightforward adoption of these techniques in the two Australian basins has not been too successful. USA techniques have also been tried with only limited success even though there are some similarities to conditions found

* Vice President - Research, National Coal Association, 1130 Seventeeth Street, N.W., Washington D.C. 20036.

in the USA. For instance, the gas content is a function of depth of cover, and face emission rates are determined by in-seam gas pressure, rate of advance and direction of extraction relative to the dominant cleat fracture system. However, Hargraves points out that before a reliable predictive formula can be derived for gas emissions and outbursts, a clearer understanding of the sorption and permeability of coal under in-situ stress conditions must be obtained. This understanding is paramount, according to Hargraves, to the development of effective seam gas drainage control technologies tailored to the mining methods used in Australia.

To illustrate the growing coal seam gas problems and the evolving measures used to resolve these problems, Hargraves provides brief case histories for four mines. From these case studies, it is evident, as one would predict, that the most serious problems occur during development. In this regard, he mentions the possibility for degasifying the seam ahead of the development entries by vertical holes hydraulically stimulated to increase gas flow rates. Worth particular mention are the author's comments that degasification by vertical boreholes does not look promising because of the depths involved (350 to 550 meters), and the possibility of damage to the roof caused by hydraulic stimulation. In the USA, similar concerns have been voiced. As a result of these concerns, the National Coal Association is making an assessment of the potential unsafe mining conditions or loss of mineable reserves that could occur from excessive or uncontrolled hydraulic fracturing of coal seams as a means to increase gas recovery rates.

Digressing for just a moment from my review of Hargraves' paper, I would like to comment on the NCA study which is just now getting started. It is already apparent that insufficient data is available on the effects of hydraulic stimulation since only a limited number of fraced holes have been mined through in the USA. To date, only 14 holes have been mined through out of a total 63 that have been hydraulically stimulated. Four of the 14 showed fractures extending into the roof. It is important to keep in mind that the observed results are based on fracing techniques designed specifically to minimize fracturing of the immediate roof and floor strata. Uncontrolled or extensive zone fracturing to capture the gas in the immediate coal bed strata (estimated to represent about 50 percent of the total gas in many areas in the Appalachian coal fields) would produce entirely different results and undoubtedly greater potential for creating unsafe mining conditions. I offer these comments on USA experiences as a reinforcement to Hargraves' view that more research is needed before hydraulic stimulation techniques be widely employed as a degasification technique.

In summary, this paper by Hargraves provides an interesting perspective on future coal production in Australia. Although extensive surface mineable coal deposits exist, some of the better quality coal exists in the deeper seams in the two established coal producing basins. These seams will have to be exploited to meet the increased world demand for coal. Consequently, difficult mining conditions will be encountered, which means technology must be developed to make the recovery of these coal reserves economical. Australia is generally perceived as a « young » coal producing country, but it is already faced with some difficult mining problems. This paper by Hargraves provides evidence that Australia intends to solve their mining technology problems.

LIEGEOIS R.,
« THE LATEST RESULTS OF COAL MINING RESEARCH IN BELGIUM »

This paper by R. Liégeois is an overview of the coal mining research work performed by INIEX and a brief summary of some of the latest results achieved. Since over 90 percent of Belgium's coal production comes from the Campine coal field, the research efforts described can be construed to represent the principal mining problems which must be solved if Belgium is to maintain their present coal production output.

Liégeois describes 10 program areas which INIEX is presently pursuing. In the field of mining problems, he mentions the successful development and use of concrete-steel sandwich panels for lining main tunnel entries which are subject to high stresses, pump pack support systems for face ends, the patented INIEX-Delogne radio communications system, and the perfection of techniques to characterize methane emissions and methane control measures for pre- and post-drainage. One interesting point Liégeois makes in his paper is that water infusion has only limited applicability as a means to reduce methane emissions since the coal seam itself contributes only 10 to 20 percent of the total emissions with the remainder of the gas emitted into the mine workings coming from the immediate strata. Similar results were also observed in the USA Appalachian coal fields where strata conditions are such that approximately 50 percent of the gas is present in the coal seam with the remainder in the immediate strata.

Still in the development stage are experimental computer-controlled ventilator regulators. These ventilator regulators are located underground and are controlled from the surface.

The safety research efforts described are the development of a water tube-explosive dispersed explosion barrier and the development of a small sample

test for measuring the inflammability of conveyor belting. Neither of these developments has progressed to the point where they are ready for deployment.

In the area of machinery development, two areas are under investigation. One is a search for tunnelling machines which can handle 1500 kg/cm² compressive strength rock, be economical to operate for short runs of 500 to 1000 meters, and be capable of cutting without requiring radial jacks to provide thrust since the steel sandwich tunnel supports are not solidly blocked in place. The other development covers hydraulic transportation of 25 mm (minus one inch) of coal. A test loop has been set up to determine degradation of the coal.

In the category of longer range developments, Liégeois briefly reviewed the Belgo-German underground gasification project which is aimed at the recovery of very deep coal seams by in-situ coal gasification. The progress of this work will undoubtedly be closely followed by many countries that also have very large reserves at depths which cannot be recovered with present mining technology.

Liégeois concludes his paper with a remark that may very well be the critical point that determines the fate of the coal mining industry in Belgium. I quote, « We are convinced that only intensive research, with adequate financial means, will make it possible to overcome the difficulties of the (our) coal mining industry ». Perhaps this thought may well apply to many other coal producing nations in this world that are exploiting deep seams in coal basins which have been extensively mined in the past.

BASSIER, F.K.,
« VIABILITY AND RISK ASSESSMENT PROBLEMS WITH INCREASING WINNING CONCENTRATIONS IN COAL MINING »

Upon completing my review of the paper by F.K. Bassier, I had two distinct impressions. First, it appears to me that this paper is an excellent research paper because it provides many vantage points from which we can look with some clarity into the future to visualize what technologies are needed to advance coal mining techniques and profitability. Secondly, I was impressed with the clarity of his presentation and the availability of excellent data to analyze and describe the complex interdependences which exist between engineering design options and economic parameters that determine the ultimate profitability of a coal mine. I believe both of my impressions warrant further comment and I hope that these remarks will serve as the basis for an appropriate assessment of the paper.

With regard to my first impression, Bassier characterizes reliable and predictable coal production from an underground coal mine as a balancing act among interdependent and to a certain degree, conflicting factors broadly identified as (1) viability, (2) concentration, and (3) risk. *Viability* is represented as the net product from the integration of all the dependent and independent systems and subsystems that begins with delineating the reserve, to extracting coal from the solid seam, and finally ending with placing the coal in a transport for shipment to the user. The author provides ample proof by the data in his paper that the Walsum Colliery was successfully « engineered » to achieve a real 18.7 percent decrease in total labor and material costs over a nine-year span (1970-1979) by increased mechanization and a reduction in number of working faces by operating fewer but higher production faces. He credits much of the success to the reduction in number of working faces which illustrates the criticality of the second factor — that of *concentration*.

Concentration is defined as the collective actions and requirements necessary for matching the desired daily output of a mine with the optimal number of production faces. Several excellent examples are presented to show the characteristic effects of the ratio of available working time to actual coal cutting time, seam quality and thickness, relative machine productivity (technology) and the ratio between fixed and variable costs. These latter parameters coupled with the geologic conditions and other mine specific elements, including management, will affect the choice of the optimum number of production faces by introducing the third interdependent factor — *risk*.

Risk, as Bassier characterizes it, is the divisor of *concentration,* the dividend, and *viability* is the resulting quotient. The fewer the number of production faces the greater impact on total production when the risks are high and the tonnage from any one face is lost. Quantifying many of the risks involved is acknowledged as being difficult, but nevertheless, some quantification is necessary. I believe the author properly and adequately points out that the risk « divisor » can be reduced by paying careful and detailed attention in the planning phase covering mine design (lay-out), production scheduling, and equipment selection.

In summary, my first impression, as I stated earlier, is that the paper is an excellent research planning paper, as the critical operational factors affecting the future long-term viability of a coal mine are well illustrated for detailed analysis. Research and development planning from such a solid base of practical understanding may well be the most productive avenue to increasing the viability of underground coal mining operations.

My second impression is no less important than the first. Throughout the paper, Bassier touches on the need for extending the « state of the art » to realize the full potential benefits from greater concentration of production faces without increasing the risk. The data presented and analyzed by the author is an excellent means for characterizing the economic benefits to be gained by extending the capabilities of subsystems and systems that make up a mining operation.

NEHRING H.,
« MODERN OPEN CAST MINE SURVEYING BY USE OF PHOTOGRAMMETRY »

This interesting paper by Nehring summarizes the experiences since 1960 of Rheinische Braunkohlenwerke in meeting their mine surveying needs throughout the life cycle of their large open cast mines. Mine surveying requirements are outlined and these requirements are discussed with respect to the performance capabilities of ground surveying methods versus aerial photogrammetry. Compared are the advantages and disadvantages of the equipment utilized by each of the two methods and their specific operating characteristics as related to the surveying tasks and final product required. Conclusions reached were that with the development of advanced electro-optical auto recording tacheometers, ground surveying is more economical than aerial photography if the survey covers less than 50 hectares (123 acres). However, it was noted that the two basic methods, ground surveying and aerial photography have distinct unique capabilities which can be utilized to great advantage by mine management to meet unusual or specialized needs.

Some of Rheinbraun's specific experiences as reported by Nehring are worth repeating. As compared to the traditional rod-reading distance measuring and manual data recording survey procedures, the modern electro-optical tacheometry instruments have resulted in a 40 percent decrease in surveying costs and have considerably increased the usefulness of ground survey techniques. A combined capability of ground surveying and aerial photography represents an excellent combination that has met all the routine and specialized needs of or demands placed upon Rheinische Braunkohlenwerke. However, the costs of maintaining a complete and self-sufficient aerial photogrammetric department including computer data processing, are quite expensive even for a large operation such as Rheinbraun because full utilization has not been required. Accordingly, management has opted to make their photogrammetry services available for hire to help defray the costs and maintain this department as an in-house service.

Rheinische Braunkohlenwerke's experiences with a specialized service requirement are certainly not unique in the mining industry and it will be interesting to follow the course of events over the next several years. As pointed out by Nehring, the unique potential applications of aerial surveys employing « environmental assessment sensors » may well be the added capability which will justify maintaining this as an in-house service. In any case, this added capability should provide the wherewithal for attracting outside clients and help defray the costs of the aerial photogrammetry department.

DARET J.,
« TIRE-MOUNTED TRANSPORT SYSTEMS AT THE HOUILLERES DE PROVENCE »

In his paper, Daret discusses the equipment selected and added safety-health precautions required in the conversion of the Houillères de Provence mine, from its traditional designed rail haulage transportation system to conveyor belts and diesel powered tire-mounted vehicles for transport of men and materials from shaft bottoms to working sections.

Although mine operations and geologic conditions such as a hard limestone floor appeared to be quite favorable for conversion to trackless equipment, Mr. Daret points out that the conversion eventually required a major overhaul of the mines' infrastructure including roadway layout and geometry to control grades and vehicular traffic, special provisions for routine maintenance and repair work on equipment, additional ventilation requirements, new control measures for continuous and comprehensive monitoring of the mine environment, and specific fire prevention measures, fire fighting control and emergency provisions. The development and successful incorporation of the necessary additional management controls, including special safety and health protection measures enabled Houillères de Provence mine to employ diesels underground and to realize a 15 percent reduction in the number of man-shifts supporting face production. Specific improvements which have been documented are based on a comparison between the preconversion base period of 1969-70, and the year 1978-79, which represents the fifth year of complete conversion to dieselized tire-mounted vehicles for transportation of men and materials.

The achievements are :

- Reduction in the number of men required for roadway maintenance because of the better initial constructions required.

- Reduction in amount of labor involved in face production set-up and dismantling because of ease of material delivery and mechanization in handling components.
- Reduction in number of men involved directly in hauling supplies and materials because of more efficient equipment handling and transport compatibility.
- No change in maintenance force — an unexpected benefit.
- Increase in number of personnel assigned to safety duties to handle ventilation and dust control requirements.

Most of the tire-mounted diesel equipment selected by Houillères de Provence are units commonly found in metal mines, or are modified designs of such units. These include graders, LHD's, flatbed trucks, personnel Scout-type vehicles, and specialized vehicles for fire fighting, transport and maintenance. For roadway driving, electric motor driven machines, such as continuous miners, shuttle cars, pay loaders, and dinting machines, are used. In addition, a number of specialized vehicles are used for clean-up and roadway paving and maintenance. A continuous program of experimentation is underway to find mobile units suitable for mechanization of routine services and to improve on the capabilities and reduce operating costs of the transport equipment used in the mine.

This paper quantifies the benefits that were obtained with dieselized trackless transportation and haulage systems and the necessary additional safety and health precautions which had to be taken to insure the safe use of Diesels in coal mines. Although not mentioned by Mr. Daret, it would seem that success was not only the result of management's commitment to make whatever changes were required in the mine's infrastructure, but also the result of the cooperation of the mine workers. Such cooperation is essential for successful conversion of any mine to a new system.

DEJEAN M. AND RAFFOUX J.F., « PLANNING AND DATA PROCESSING IN COLLIERIES OPERATIONS »

The authors, Messrs. Dejean and Raffoux, trace the use of computers in the French mining industry, in solving strata control problems. They pointed out that since 1968, the evolutionary development of geotechnical strata control models continued to advance their applicability to French mining conditions. And the use of these models has been possible because large-scale computers were developed with the capability to perform economically the millions of calculations required by the increasingly complex geotechnical models using numeric algorithms to describe strata conditions. Presently, the direction taken for improving the prediction of strata behavior by geotechnical models is by incorporating into the models non-elastic responses to stresses that occur at strata planes and joints and the boundaries around mine openings. The authors acknowledge that these very complex elastic-plastic behavior models may not prove practical to use because of their high costs of application.

I might also add that the final product from complex elastic-plastic models may not be much more usable than the results from the simpler two/three dimensional models based on elastic behavior. Perhaps the more fruitful approach for the mining industry in general is to take optimum advantage of computers for mine design and planning purposes by developing empirical models based on in-situ measurements. In fact, the authors themselves suggest this prospect by presenting in detail, the methodology and results obtained from comprehensive in-situ convergence measurements of roadways and faces that are then used to define the geomechanical response of the strata to mining operations.

A good example reported by the authors of the practical use and value of in-situ convergence measurements on longwall faces is the development of an empirical model which relates the convergence of the face to the load capacity required by roof supports. A mine engineer using computer assisted calculations is then able to develop a range of roof support requirements for a specific face. From these roof support pressure figures, a proper selection of specific hydraulic supports could be made. As mentioned earlier, I believe it is this kind of application of the principles of rock mechanics that will enable mine engineers and managers to gain confidence in the use of more theoretically-based geotechnical models in mine design.

The authors conclude their paper by predicting that the recent development of micro-process computers will have a profound influence on the direction taken by the mining industry in the use of computers for mine design and production planning. I share this view with the authors for the same reasons advanced in their paper, but I would suggest more emphasis be given at this stage of development to simplifying the data collection and data processing (models) to make their use practical for small mining organizations. Even limited applications would have value, in that engineers would become acquainted with mini-computers and develop confidence in utilizing these as operating and management tools.

THOMAS V.M.,
« COLLIERY APPLICATIONS OF MINOS : A STANDARD COMPUTER SYSTEM »

The Minos system described in the paper by Thomas may very well be as the author contends, the technological achievement which will provide the means for the British coal mining industry to arrest its 10 years of stagnant productivity and increase its daily output per face to a new plateau. The optimism expressed by Thomas is based on the capabilities of Minos to ably serve two key principles articulated by NCB as critical to the successful management of the complex process of mining coal.

The first principle is that efficient coal mine operations are dependent on information and a system that collects, transmits, stores and processes data in real time and presents it to management in logical form for intelligent decision-making. The second principle is that only when complete and accurate real time information is available can a « control loop » be utilized. According to Thomas, the control loops are the critical precursors leading to automation of mine operations.

According to this status report by Thomas, the Minos system was designed with these data collection and management principles in mind and in its continuing development, these objectives have been kept clearly as the number one priority. NCB believes, based on actual colliery applications, that the right path has been taken for exploiting the wonderful promise of computer technologies in coal mining operations.

The rapid introduction of Minos in production operations certainly provides visible proof of the National Coal Board's commitment to take full advantage of computer technology. As reported in this paper, 22 unit application systems are on line and 47 more are on order. Cost-benefit assessments have been made only for the coal transport unit operation of which 17 are in use and 17 ordered. Based on a four colliery study, NCB reported a payback was achieved within one year in three mines and within 2.5 years in the fourth mine. « Cost savings » or capital recoveries were accumulated in three areas : manpower savings, reduced stoppage time and increased production. Credit should probably also be given for these early payout figures to the meticulous attention paid to the software component of these systems to insure that no internal flaws exist. Apparently, an excellent job was done in debugging the systems prior to installation. Other unit operation systems will also be analyzed in turn after they have gone through their break-in period.

The thought occurred to me that payout for unit systems other than the coal transport unit may well be a better measure of the economic cost-benefits of the Minos concept. I say this with reference specifically to units such as production and environmental monitoring even though these may be more difficult to assess and to obtain exact figures on their prorated share of the total cost of production.

Thomas concludes his paper by stressing the importance attached to the Fido module which is the unit designed to monitor key operations on the face. The very ambitious program calls for installation of 28 faces before the end of this year. This program is further evidence that the NCB believes major gains in face production will follow in due course. Consistent with the principles mentioned earlier as required for efficient mine operation, management will now be given the information upon which it can base its decision to debottleneck face production systems. The Minos program has certainly attracted the attention of coal producers around the world and the results to date justify a close watch of the progress achieved in the marriage of computer technology and coal mining. The promise is there for a peaceful and productive marriage.

SAMPLES R.E.,
« HYDRAULIC TRANSPORTATION SYSTEM AT THE LOVERIDGE MINE »

Consolidation Coal Company's (Consol) coarse coal hydraulic transportation system has two unique distinctions : (1) it is the only known hydraulic transportation system ever introduced in a USA underground bituminous coal mine, and (2) it has taken only 10 years to go from the research laboratory to a commercial installation. This latter fact is quite significant when one considers that the present normal technology development timeline is more like 20 to 25 years. The development of Consol's system represents an important achievement and obviously is the product of a steadfast commitment by the company's management to proceed in an orderly but consistently fast pace to conclude the project with the installation of a mine-worthy system. As evident from this paper authored by R.E. Samples, managements' commitment to an « integrated » approach was the driving force that guided the development towards the goal of a practical continuous haulage system. This system not only eliminates a very large constraint to the efficient use of continuous miners, which are widely used in the USA, but it can also be modified for use with longwalls and reduce the serious transportation bottlenecks which occur when high tonnage longwall faces operate in a multisection mine.

The coarse coal hydraulic transportation system, described by Samples, has many interesting and innovative features which Consol expects to further

modify, improve and employ in other hydraulic transportation system configurations. One particularly important advancement would be the development of a more versatile and efficient injection/pumping system. With such enhanced capability, hydraulic transportation systems could be tailored to meet a wide variety of special conditions, some of which are specifically mentioned by Samples. There seems little doubt that hydraulic transportation of coal from underground to surface will pave the way for innovative mine designs as well as the design of surface facilities so that maximum advantage can be taken of the flexibility which hydraulic systems possess.

Although Samples' paper discusses the advantages and benefits of hydraulic transportation systems, these are sufficiently noteworthy to justify my summarizing them once again. Briefly, these are :

- Potentially lower capital costs.
- Integrated and unitized face systems that minimize the requirements for auxiliary units which complicate equipment movements and compromise mining sequences.
- Reduction in secondary dust generation sources and elimination of potential fire ignition sources such as belt/car transfer points and trolley lines.
- An « emergency » fire fighting capability.
- Simpler, more efficient mine entry systems because of reduced need for belt/vehicular traffic.
- Potential for overall improved safety conditions in the mine.

In looking at the future of underground coal mining in the USA for the next 20 to 30 years, most experts predict that present technology limitations will be sufficiently constraining to limit the underground mining growth rate to about one-half that of surface mining. Perhaps these predictions should be reexamined in light of the promising future for hydraulic transportation systems and their ability to offer mine operators an opportunity to adopt innovative approaches to mining. This paper by Samples strongly suggests that Consol has already made that reassessment and is ready to practice what they believe.

CONCLUDING REMARKS

To conclude my report on the papers in Session II, I offer the following observations regarding the general trends in coal mining research.

In the past 10 to 20 years, the emphasis in R & D was primarily placed on evolutionary or incremental technology advancements that could be immediately coupled with present mining practices and equipment and produce optimal results. Examples of R & D programs and results that fit this characterization and which were reported upon in this session, are coal bed gas control techniques, application of computers to production operations and adaptation of equipment developed for other industrial uses such as diesel-powered transport vehicles and aerial photography. This emphasis on short or intermediate term objectives has produced a pay-off in improved mining technologies, as evidenced by the results reported in this session's papers, and undoubtedly has enabled mines with difficult mining conditions to remain in operation and be competitive.

It seems, however, that now is the time for greater emphasis to be placed on more revolutionary R & D goals. Two factors which I believe support my views are : (1) the more favorable competitive position of coal as compared to other energy supplies, and (2) the realization that the coal seams to be exploited in the future will present more difficult mining conditions. For these reasons, I would like to see more R & D of the character represented, for example, by two developments reported on in this session. I refer to the closed system hydraulic transportation of coal from the face to the surface and in-situ coal gasification. Both of these technologies, and many others not reported on here have the capability to significantly advance the technology for extraction of coal.

Perhaps some of you will disagree with me on my choice of examples that characterize evolutionary versus revolutionary technologies as I have defined them. If so, then I believe we will have an interesting discussion period and some challenging questions for the authors.

Coal gasification and liquefaction

Dr. Andries BRINK *

There are no doubts anymore about the increasingly important role that coal will have in our future fuel supplies. For many applications though, coal is an inconvenient fuel because

a) it is a solid and therefore difficult to handle, especially when it comes to metering flows accurately ;
b) it is a dirty fuel. Its ash and sulphur contents are especially obnoxious ;
c) its burning qualities are poor. This is mainly due to its low hydrogen content.

It is not surprising then that much development work has gone into first, coal gasification, and, more or less from the beginning of this century, the liquefaction of coal. To-day there are three gasification processes and one liquefaction process that can be accepted as commercially proven. There is a bewildering multitude of gasification and liquefaction processes in various stages of development, though. One forecasting firm foresees as many as 31 processes for coal gasification and 25 for liquefaction [1]. It is one of the reasons for holding conferences such as this that it enables one to take stock of the situation and to obtain some sort of perspective on what the future is likely to offer.

GASIFICATION

We are greatly indebted to the authors of two papers in this session which afford us an overview of the status of gasifier development in the Federal Republic of Germany and the United States of America respectively. Specks first discusses the eight pilot plants which are in operation or under construction in the Federal Republic. The products from these pilot plants span the whole spectrum of heat contents from substitute natural gas to low heat content gas intended for power plant operation. Of special interest are improvements to existing commercial gasifiers :

- The high-pressure Lurgi gasifier
- The pressurized Winkler gasifier
- The Texaco gasifier with coal slurry as feed
- The pressure Koppers-Totzek, now usually referred to as the Shell-Koppers.

Mr Specks then goes on to describe various large-scale versions of these gasifier projects which are under study. It should be noted that the expected investment costs could amount to a staggering 13 billion DM.

In their paper Fumich and Perry catalogue the gasification projects being partly sponsored by the US Department of Energy. The two projects closest to possible commercialization (only one will be selected) are the British Gas/Lurgi slagging gasifier and the COGAS pyrolysis/gasification project. In both cases the primary gasifier product will be upgraded to high heat content pipeline gas. Other gasification projects under development are the BIGAS and IGT's « U » Gas and HYGAS processes, all aimed at eventually producing high heat content pipeline gas, the Westinghouse pressurized fluidized-bed gasifier, which can produce low or medium heat content gas depending on whether air or oxygen is employed, and the Combustion Engineering low heat content gas producer which has the potential of being a near-term replacement for oil burning in the electric power industry. Further down the pipeline, it seems, are the Exxon catalytic gasification and the Rockwell hydrogasification processes.

I would now like to discuss the three papers which deal with individual gasification projects. Adlhoch and Theis report on the progress made in converting the atmospheric Winkler to a higher pressure gasifier capable of producing synthesis gas of acceptable quality for a methanol plant or for use as a reductant

* Research Manager, Sasol One, Post Office Box 1, 9570, Sasolburg, South Africa.

in the metallurgical industry. Significant progress has indeed been made ; one also hopes that it may be possible to increase the pressure capability of this gasifier to at least 30 or even 50 bar.

The paper by Sato discusses progress on the 5 ton/day pilot plant at the Coal Mining Research Centre ; the objective being to produce a low heat content gas suitable for combined cycle operation. Significant progress has been made with the solution of the problem of clinker formation. The specific throughput is quite satisfactory but coal conversion is still not sufficient to produce a carbon-free ash, despite a two-stage gasification system. In the case of the NCB gasification system, which is reported on here by Robson, the objective is very much the same. In the NCB case they have circumvented the problem of low carbon utilization typical of fluidized bed processes by deliberately opting for a low percentage conversion in the gasification stage and feeding the char to a fluidized bed combustor. It is also possible to gasify caking coals owing to the rapid internal circulation in the gasifier. These two gasification systems still have a long way to go but both show great promise of being worthy additions to the array of gasifiers which should be at our disposal in say five to ten years' time.

In general one has the distinct impression that in the near future it should be possible to gasify any type of coal from brown coal to anthracite (including char) in any size, from coarse to fine, to produce gas of various compositions and heat contents varying from say 5 to 35 MJ/m³, at pressures ranging from atmospheric to 50 bar or even higher.

LIQUEFACTION OF COAL

Indirect liquefaction

The Fischer-Tropsch synthesis was discovered and developed in pre-war Germany. After the 2nd World War the scene shifted to South Africa where Sasol built one plant in the fifties which incorporated both fixed-bed and entrained bed reactors. When the oil crisis came in 1973 it was decided to expand the oil-from-coal operations and a much larger entrained bed (or Synthol) plant was built at Secunda. This is now coming into operation. When the oil crisis deepened it was decided to build Sasol Three which is practically identical to Sasol Two.

The Fischer-Tropsch reaction at this stage of development is not a selective reaction and the product spectrum spans a wide range of carbon atoms. It is possible though to shift the spectrum over a considerable range and further, secondary changes in selectivity can be brought about by suitable choice of processes for the work-up of the primary products. Most important are oligomerization of the light olefins and hydrocracking of the heavy, wax-range molecules. From the Synthol synthesis product it is possible to derive as much as 75 % petrol or up to about 50 % diesel.

Research projects being actively pursued by Sasol are :

a) The further refinement of the Synthol reactor system and work-up of the products. At the same time serious attention is given to the fixed fluidized-bed reactor as alternative to the circulating fluidized or entrained bed reactor.

b) Improvements in the specific output of fixed-bed reactors. One possibility here is the Kölbel or slurry-bed type reactor.

It has been demonstrated that through selective hydrocracking of the waxy portion of a fixed-bed reactor product an overall diesel selectivity of 70 % is possible. This is diesel of cetane value around 70. It may be mentioned here that Hardenberg of Daimler-Benz in a recent article came to the conclusion that just such a product from a fixed bed reactor would be the ideal diesel fuel [2].

The relatively poor selectivity of the Fischer-Tropsch reaction has prompted investigators to look for more selective routes from synthesis gas to fuels. One such approach is the Mobil petrol-from-methanol route. It is possible to obtain high selectivity to a high-quality petrol via this route. At the moment it is not possible to make diesel from methanol. Since the economies and thermal efficiencies of the Mobil-M and Fischer-Tropsch routes should be comparable, the choice between the two will be dictated by the marketing situation. In areas where co-products of the Fischer-Tropsch route such as methane, ethylene, alcohols and ketones, etc. can be profitably disposed of and where a balanced fuel slate is desired, it should have the edge over the methanol route.

Direct liquefaction

The direct liquefaction route was commercialized before the indirect or Fischer-Tropsch route. After the second world war it fell into disfavour but interest in this route was re-kindled in the sixties. Research and development gathered momentum in the seventies and the beginning of the eighties sees the completion and commissioning of two large pilot plants (H-coal and EDS), another one of similar size scheduled for start-up next year (Bottrop plant) and two 6 000 ton/day plants in the design stage (SRC I and II). We are again indebted to Mr. Specks and Messrs Fumich and Perry for their reports on the status of development of direct coal liquefaction processes in the Federal Republic and the United States of America.

There are still some formidable hurdles to be cleared before the second generation of direct liquefaction processes can be regarded as technically acceptable. Most important among these are

- preparation and preheating of the slurry
- optimization of the fluid dynamics of the reactor
- heat recovery from the reactor effluent
- pressure let-down of the liquid effluent.

In addition refining of the primary liquid products to produce transport fuels of acceptable quality has received very little attention until now. While there is little doubt that fuel oils of low enough N & S contents and satisfactory burning qualities can be produced, the deeper refining to yield transport fuels needs greater research effort : In view of the aromatic nature of liquefied coal and taking into account the cost of adding further hydrogen, the hydrocracking of the primary products to yield mainly petrol seems to be the most attractive refining route. Some work has been done in this direction [3] and I think we can accept that a highly aromatic petrol blend stock can be produced by two-stage hydrofining/hydrocracking of the primary liquid product, followed by catalytic reforming of the naphtha. Catalytic cracking of a deeply hydrotreated fraction also seems to be attractive [4]. If acceptable diesel fuels are to be made almost complete saturation of the aromatic structures will have to be done in order to reach a cetane number of 45. From limited work done at Sasol this seems to be a target that may be difficult to reach, but not impossible. The rank of the coal used for liquefaction probably plays an important role in determining how easily this target is reached, the lower rank coals being better in this respect.

I would like to return briefly to the matter of commercialization. There are at least five front-runners with another two or three somewhat further back. All these processes have a lot in common as regards the technical aspects that need to be studied before they are ready for commercialization. In my view only one or two demonstration plants will have to be built and the knowledge thus gained should be directly transferable to the other processes which are to a very large extent but variations on the same theme.

PYROLYSIS

There is much to be said for a process that creams off the lighter and hydrogen-rich fractions of the coal, leaving behind a char which can be gasified or used for power generation. At this session we have a paper by two Australian authors, Smith and Bradshaw, detailing their results with flash pyrolysis of some Australian coals. They first present some very useful data on the effect of temperature on yield and quality of tar. It is fortunate indeed that the maximum yield of tar at around 600°C, occurs when the aliphatic H to aromatic H ratio in the tar is still at or near its maximum value. This should facilitate the refining of the tar to fuels, especially diesel. These two authors then go on to show that pyrolysis is comparable to conventional direct liquefaction as far as costs are concerned.

In their review paper on coal research in South Africa Sander and Dekker make brief reference to low-temperature fluidized-bed pyrolysis of South African coals. The tar yields were disappointingly low which is difficult to understand since Australian and South African coals are both of Gondwanaland origin.

There may be considerable scope in future oil-from-coal plants for flash pyrolysis coupled with either gasification of the char to produce synthesis gas for indirect liquefaction or utilization of the char to produce electric power. In either case one would like to see work done on the integration of the two stages, the pyrolysis and gasification stages, for instance. The char exists from the pyrolyser at a high temperature and it will be necessary to conserve this heat in the feed to the gasifier. This presupposes of course that a suitable pressure gasifier capable of taking in fine, hot char will be available. At the same time the idea of quenching the pyrolyser effluent with a H-donor solvent, as proposed by the Occidental Company, should be worth following up. In this way a much lighter tar is obtained. This should be a much more acceptable feedstock to a subsequent hydrogenation facility.

Supercritical solvent extraction has much in common with pyrolysis. It is a process that is being developed by the National Coal Board in the United Kingdom and the report by Sander and Dekker briefly refers to similar work at the Fuel Research Institute in South Africa. Here again one would like to see (a) supercritical solvent extraction integrated with gasification or fluidized-bed combustion and (b) a technical and economic comparison of the extraction and pyrolysis routes.

HYDROPYROLYSIS

As the name implies hydropyrolysis is pyrolysis carried out in a hydrogen atmosphere. Prof. Cypres has ably summarized existing knowledge on this process. Of special importance are hydrogen pressure and rate of heating. The combined yield of liquid and gas can be more than 50 %, the liquid consisting mainly of benzene, toluene and xylene or BTX, while methane is by far the major component of the gas fraction. The char is desulphurized in the process since the organic sulphur is eliminated more or less completely while ca 50 % of pyritic sulphur is evolved as H_2S. As pointed out by Prof. Cypres, this char

could be an excellent fuel for fluidized bed combustion. It is non-caking and the greatly reduced sulphur content could give it a considerable advantage over limestone desulphurization systems.

Development of the hydropyrolysis concept is mainly in the United States where Rockwell International Corporation is in the forefront. The scale-up sequence is already at the 1 ton/h stage.

CONCLUDING REMARKS

A striking feature of research and development on coal gasification and liquefaction is the increasing role played by Government agencies, especially as far as financing is concerned. In the majority of cases the initial development was in the hands of private companies but as the processes move through pilot plants to demonstration plants Governments become increasingly involved. This development has its drawbacks but in view of the very large sums of money involved it is also inevitable. It is clear that for coal liquefaction to become a large-scale reality it will require Governmental assistance in the initial years, both as regards financing of developmental plants and regulation of the price structure.

A second striking feature is the increasing way in which development costs are shared at the international level. There are many examples of this, the most recent being the sharing of the cost of the SRC-II demonstration plant at Morgantown among the Governments of the United States, the Federal Republic of Germany and Japan. Conversion of coal to oil and gas on a large and economically attractive scale is so massive and complex an undertaking that only with the utmost co-operation between industry and Government, both nationally and internationally, can success be assured.

REFERENCES

[1] Anon., Env. Sci. Tech., 1980, 14, 652.

[2] Hardenberg, H.O., S.A. Mech. Eng., 1980, 30, 34.

[3] Tan, G and De Rosset, A.J., DOE Report FE - 2566 - 12, « Hydrotreating and reforming H-Coal process derived naphthas » and DOE Report FE - 2566 - 23, « Hydrocracking of H-Coal process derived gas oils ».

[4] Tan, G. and De Rosset, A.J., DOE Report FE - 2566 - 20, « Hydrotreating and fluid catalytic cracking of H-Coal process derived gas oils ».

Coal Preparation

Albert W. DEURBROUCK *

As the rapporteur of the Coal Preparation session, it is my pleasure to introduce seven papers that form a timely, interesting group. Two of these papers deal with the application of coal preparation in the future, recognizing the changing characteristics of the raw coal being mined and the changing market requirements of coal feedstocks and the impact of these changes on the preparation process. Three of the papers examine the cleaning of fine-size coal, a fraction of the total coal that is increasing rapidly. These papers review the current state-of-the-art of physical cleaning of fine-size coal by bulk oil flotation and dense-medium cycloning and summarize the various chemical coal cleaning processes being developed to remove organic and inorganic sulfur from coal. One paper describes an on-line ash analyzer for fine-coal slurries, a necessity for attaining quality control as more fine-size coal is washed. The final paper discusses a new technique for the elimination of the problem of waste water treatment. So, as you see, the papers that we shall discuss this morning are all related through a common recognition of the new demands being thrust upon the coal preparation technologist.

I would like to discuss these papers from the United States point of view as I perceive it. But first, I think it is interesting to look at the energy resources available in the U.S. today and the apparent future reliance on these resources.

Nuclear power has historically grown at a much slower rate in the U.S. than predicted. This slow growth is largely attributable to regulatory requirements that have stifled nuclear power growth in the past and will undoubtedly continue to do so in the future. Oil and natural gas reserves, even by the most optimistic estimates, are very limited. Hydroelectric power has almost no growth potential. So-called renewable energy resources such as solar, wind, and tidal receive much media support but are projected to supply only a small percent of our total energy needs by the turn of the century. Coal, with proven reserves in excess of 300 billion tons, is the only viable answer to the future energy needs of the U.S. ; however, it must become a source of clean energy if it is to fulfill this promise.

Certainly, the cheapest, most proven technology for upgrading coal would be the broad-based utilization of coal preparation techniques. The acceptance of preparation technology in the U.S., however, is far from universal. As shown in table 1, total production of coal increased from 415 million tons in 1960 to 691 million tons in 1977. During the same period of time, the tonnage of coal cleaned actually decreased from 273 million tons in 1960 to only 254 million tons in 1977. This is occurring at the same time that the benefits being derived from coal preparation are seemingly becoming more widely recognized. This apparent contradiction is the result of :

1. The rapidly expanding use of low sulfur, medium ash content subbituminous coals of the western United States. These coals are generally of constant quality from thick strippable seams and, to date, are used raw even though they contain from 22 to 40 percent moisture, and

2. The slow acceptance by a large segment of the utility coal industry of the economic and operating benefits of using a washed coal.

Fortunately, there are some promising signs on the horizon. The Tennessee Valley Authority, our largest user of utility coal, is committed to a policy of switching from raw to washed coal feedstock for their entire system approximately 35 million tons of coal annually. The trend of a steadily declining percentage

* Manager, Coal Preparation Division, Pittsburgh Mining Technology Center, U.S. Department of Energy, P.O. Box 10940 Pittsburgh, Pennsylvania 15236, U.S.A.

TABLE 1. — *Mechanical cleaning of U.S. coals by method of mining*
(Millions of short tons)

Underground			Strip		Total		
Year	Production	Cleaned	Production	Cleaned	Production	Cleaned	
1960	284 8	205.8	122.6	66 3	415.5	273.2	(1)(65.8 %)
1965	332.6	251.6	165.2	78.1	512.1	332.3	(64.9 %)
1970	338.8	235.1	244.1	86.7	602.9	323.5	(53.7 %)
1975	292 8	179.4	355.6	87.6	648.4	267.0	(41.2 %)
1977	265.9	165 5	425.4	88.4	691.3	253.9	(36.7 %)

(1) Percent of total cleaned.

of eastern steam coal being prepared has apparently been arrested and in 1977 showed a small but positive upturn.

As a coal preparation engineer, I find this need for clean energy an exciting challenge. We are the first technologists to deal with the raw coal after it is mined. It is our responsibility to provide a product for the end-use customer that will meet this requirement for size, moisture, sulfur, and ash contents. Today's customer is already demanding coals of lower sulfur content than we are able to supply. Consequently, he is forced to rely upon other technologies, such as flue gas scrubbing to desulfurize combustion gases, to bring his operation into environmental compliance. However, coal preparation research is ongoing to eliminate or at least reduce the current reliance on flue gas scrubbing, and the early results of this research are promising.

As synfuels and advanced combustion processes go on-line, new feedstock demands will be made. For liquefaction processes, the catalytic effect of certain coal associated impurities plays an important role. Some such as pyrite and calcium, are known to have catalytic effect on specific liquefaction processes. Research is needed to determine which coal impurities have beneficial effects and which have poisonous effects on the various liquefaction processes. Recent work indicates that the life expectancy of process catalysts appears to be adversely affected by certain trace elements in coal. For example, it has been shown that titanium has a poisonous effect on certain liquefaction catalysts. The removal or concentration of selected minerals or trace elements by chemical or physical coal preparation is a desirable and necessary goal for feedstock preparation.

Feedstock requirements for gasification processes will be less demanding ; however, a product having both uniform quality and size consist will be needed. Furthermore, to minimize reactor plugging, agglomerating coals need pretreatment such as mild oxidation ; perhaps such treatment can become an integral part of the coal preparation process.

Mr. Cammack, of the United Kingdom, has provided us insight into the National Coal Board's policy for research and development in the preparation of coal feedstocks for the new utilization processes of the future. The anticipated future coal feedstock demands of Great Britain are reflected in the National Coal Board's current research program. Mr. Cammack discusses certain of these programs and their status.

Of particular interest, is the recent development of computer programs capable of making quick, reliable predictions of the performance of the major coal washing devices. These programs have been proven in practice on a South American coal and a domestic coal from the South Yorkshire area. At present, the computer modeling work is being extended to include the cleaning of fine-size coal by froth flotation. The overall computer program can be readily expanded to include treatment costs per ton for various processes. We have developed a preparation plant simulator model [1] in the United States but, as yet, have not determined a suitable method for characterizing the flotation process. Our experience has been that such simulators are of great value to coal preparation engineers and plant operators in the design, modification, and operation of preparation plants.

The British have assigned a priority status for fine-coal treatment consistent with many of the other coal producing countries. We are told that 20 percent of the coal mined in Great Britain is already minus 0.5 millimeter size. This is approximately 50 percent more fines, on the average, than found in U.S. coals. Obviously, the difficulty of providing a high quality, consistent product is compounded by such a high percent of fine coal requiring treatment and the percentage of fines will increase due to the continual development of new high capacity mining machines.

Mr. Cammack discusses a problem that coal producing countries will be confronted with in the near future if they have not already experienced it — the desire to remove, by physical means, select mineral impurities from the raw coal. Only through size reduction is it possible to liberate such impurities, and this will again result in further increased percentages of the coal being treated in the fine-coal circuit. While feedstock specifications for the new coal utilization processes have not, as yet, been fully defined, it is certain that for many there will be some limitation on the amount of fines allowable as these fines will pose additional problems in handling, transporting, storage, and utilization. Research will therefore not only be directed toward the upgrading of fine coal but also toward the agglomeration of the clean fines as pellets, briquettes, or extrudites.

The direction of research in Great Britain on froth flotation processing is consistent with ongoing efforts in the U.S. Both countries have an interest in the development of new flotation cells with greater capacity, new mechanisms, and new cell geometry. The U.S. pioneered flow-through flotation cells to obtain high capacity when treating a relatively easy-to-float coal. Such a system was little more than a trough with intermittently spaced agitators. Today, however, with renewed interest in high recoveries at desired qualities, we are seeing in the U.S. reacceptance of the conventional metallurgical flotation cells in which pulp is pumped from cell to cell, thus eliminating short-circuiting and providing better flotation results. These cells are being used in flotation circuits where the feed coal is classified — the coarser fraction going to conventional flow-through machines and the finer size material to the enclosed cell-to-cell machine.

There is considerable interest in the United States in agglomeration for alleviating many of the problems posed by increased coal fines. There is also interest in the agglomeration of refuse pond materials that, depending on quality, may be used as is or after some upgrading. There are some operations of this type pending that are designed to agglomerate the reclaimed material by extrusion. A pelletizing process for upgrading lignite, the Lignipel Process, [2] has been developed to provide a 9,500 Btu/lb content product from a raw coal of 6,500 Btu/lb. The pellets are resistant to spontaneous combustion and degradation from weather or handling. Because much of the U.S. lignite has a high sodium content, which is readily removed by ion exchange, the Lignipel Process contains an optional step for sodium removal using hydrochloric acid as the reactant. Sodium can be leached out of the lignite by water in a manner similar to the removal of chlorine from coals in Great Britain, as described by Mr. Cammack ; however, we found the rate of sodium removal by water was too slow to be economical. In the United States, the chlorine content in coal is generally at acceptable levels ; however, the utility people in the U.S. are cognizant of the problems posed by elevated chlorine content in coal and carefully avoid the use of high chlorine content coals through continual chemical analysis.

I am sure that if a survey was taken of coal preparation plant operators in the United States asking them what they perceived as their principal operating problem, the dewatering and disposal of thickener underflow would be among the first mentioned. I therefore found Mr. Cammack's description of the membrane plate filter press of particular interest. The use of plate filters is just beginning to find acceptance in the United States. The promise of increased capacity at somewhat lower moisture content, as the membrane plate filter press would yield, and the possibility of an automated control system that would provide filter cakes of consistent quality would be a most welcomed technological advance. The many similarities between the coal preparation research programs of the National Coal Board and those we have in the United States reflect our common recognition of the importance of coal to our future energy needs.

Interestingly, his assessment of the importance of conventional direct coal combustion for the future in the United Kingdom differs from the projection for energy sources in the United States. The National Electrical Reliability Council has predicted that by the year 2000 we will directly fire, in utility boilers, 1.285 billion tons of coal.

Similarities with the research programs of Great Britain are found in the paper by Dr. Bethe that details the impact of changing raw coal properties and market trends on coal preparation in the Federal Republic of Germany. As the choice coals have disproportionately been mined in the past, future ventures must take into account the utilization of the inferior, lower quality seams that will contain more ash, sulfur, and trace elements. The effect on coal preparation technology of utilizing these coals will be significant. Particularly serious for the preparation process will be the increase in the proportion of fine sizes below 100 microns, which, it is anticipated, will double by 1990. Furthermore, the mean particle size of the raw coal would decrease from 25 millimeters to only 9 millimeters. The traditional market requirements for coal in West Germany will change with the development of new technologies for direct combustion or conversion of coal to liquid or gaseous fuels. Common to all applications will be the demand for uniform, high-quality products tailored to meet the requirements of the particular technology. Product specifications will expand from ash, sulfur, and moisture contents to include trace element content and, in some cases, maceral content. The effect of these

stringent, more demanding, market requirements, combined with the general deterioration of raw coal quality, will be to require development of new techniques and equipment for the preparation process. Increasing variations in the raw coal properties and their effect on the operation of a preparation plant and on the quality of the salable product can be controlled by expanding homogenization and blending systems upstream and downstream of the cleaning and dewatering facilities.

Depending on the increase in surface moisture, dry separation of the fine-size fraction will have to be abandoned in West Germany and replaced by desliming and wet cleaning. Extensive work is being carried out in the development of equipment for processing the increasing fines load. Jigs, long the workhorse of the industry, are being refined to wash narrow size ranges of fine-size coal at high efficiencies. New froth flotation procedures and machines are being developed for processing of the minus 0.2-millimeter material. Certainly, wet cleaning of the fine fraction results in a higher quality product ; however, the cost of wet processing is often found to be disproportionately increased. The production of increased fines will necessitate the development of suitable agglomerating processes for assuring final products exhibiting specific size distributions and desired portions of certain macerals. In West Germany, future coal preparation requirements will include improved mechanical dewatering and thermal drying processes for treatment of small and fine-size coal, utilization of the residual coal contained in the tailings, development of agglomeration processes, and development of processes to provide feedstocks for the new technologies.

Dr. P.J.F. Foury, from the Republic of South Africa, discusses the application of dense-medium cyclones to the cleaning of coal finer than 0.5 millimeter. He notes that the coals in his country are comparatively difficult to clean, so much so that studies conducted by the Fuel Research Institute of South Africa showed that the conventional fine coal treatment processes, such as froth flotation, wet concentrating tables, and water-only cyclones, operated with negligible success. However, after conducting a series of washing tests in a dense-medium cyclone, it was shown that excellent separations can be obtained for the fine-size material at acceptably low magnetite media losses.

In the United States, a number of dense-medium cyclone plants have been built in recent years that treat coal slurries as coarse as 1-1/2 inches top size down to 0, with no classification of the feed. Although the operators of these plants are generally pleased with the separation obtained, little actual performance data is available for determination of the sharpness or efficiency of the separation. When performance data is developed, it is normally only available for the plus 0.15 or 0.1 millimeter material. The sharpness of the separation of the 0.5 millimeter by 0.1 or 0.15 millimeter material shows significant deterioration and the 0.1 or 0.15 millimeter by 0 material is normally sent to waste.

Some newer plants featuring dense-medium separators are being built that minimize the coal losses

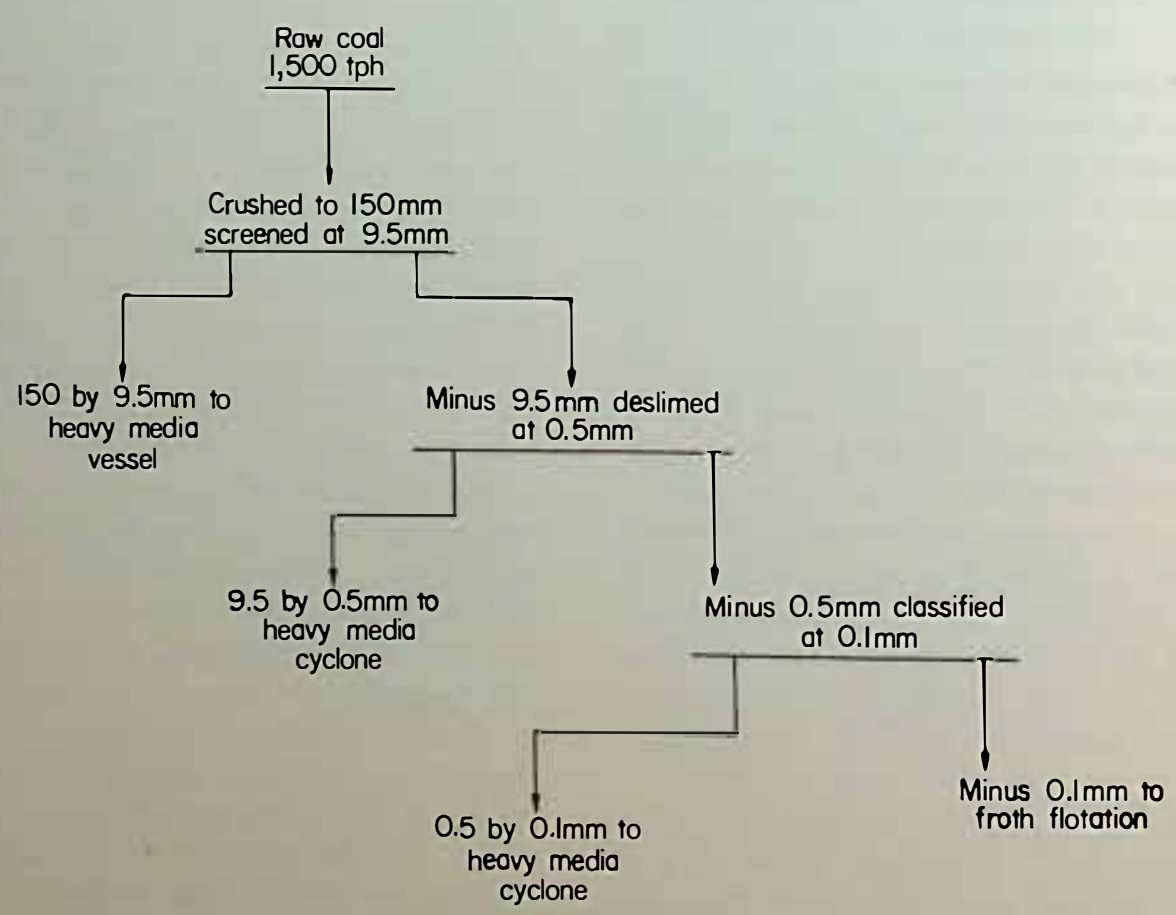

Fig. 1 — Marrowbone preparation plant

and assure sharp separations throughout the total size range of the coal being treated. The Marrowbone Development Company plant at Kermit, West Virginia, is an interesting example of such a plant. The flowsheet of this plant is shown in figure 1. Here, the total raw coal is crushed to 150 millimeters top size. The 150 by 9.5 millimeter material is washed in a heavy media vessel. The 9.5 millimeter by 0 material is deslimed at 0.5 millimeter. The 9.5 by 0.5 millimeter material is washed in a 630 millimeter diameter heavy media cyclone. The 0.5 by 0.1 millimeter material is washed in a 250 millimeter diameter heavy media cyclone, and finally the 0.1 millimeter by 0 material is treated by froth flotation. Although this plant has been in operation for less than a year, all indications are that it is doing an excellent job in producing a final product of acceptable quality with low magnetite media losses.

Our experience in the United States would seem to be consistent with our South African counterparts. Dense-medium cyclone washing of fine-size material is completely satisfactory when the raw coal is fractionated into acceptably narrow size ranges, when sufficiently fine-size magnetite is used as medium, and when attention is paid to the design of the media recovery circuit.

While reading Dr. Foury's paper, I could not help but notice the difference in technological approach from the paper by Dr. Bethe, of the Federal Republic of Germany. The South African paper makes no mention of testing jigs for the treatment of their coals while Dr. Bethe's discussion of washing technology is concentrated almost exclusively on jig washing.

One of the exciting new coal utilization technologies is the combustion of coal/oil mixtures in conventional oil-fired utility boilers. In Canada, demonstration projects of this technology include at present the firing of a 10 MW boiler and the projected firing of an even larger unit. In the paper by Whaley, Capes, Ogle, and Reeve, the need for coal oil mixture (COM) technology is presented along with a review of its current status. It is apparent that COM technology is very close to commercialization ; however, there is still research that remains to be done on the preparation of the coal feedstock. For example, new, less expensive fine grinding techniques need to be developed to assure maximum release of coal associated impurities and to promote stabilization of the coal in the oil slurry. Furthermore, new coal preparation techniques must be developed, or existing techniques modified, to successfully wash the finely pulverized coal.

The authors discuss the Spherical Agglomeration Process - a proven, viable technology for cleaning fine-size particles of coal. Dr. Capes, a co-author of this paper, is renowned for his developmental efforts of the Spherical Agglomeration Process. The amazing selectivity of oil agglomeration using a variety of oils is especially attractive when (1) cleaning the finest size fractions to produce ultra-clean coal, or (2) processing very dirty fine coal slurries in an attempt to maximize recovery. It is puzzling that this and similar processes utilizing oil as a coal collector have not had broader commercial success. The marriage of oil agglomeration with COM technology is an interesting and logical approach and may well lead to widespread acceptance of the technology. The biggest drawbacks to acceptance of oil agglomeration as a routinely used coal preparation process are the high cost of oil as an agglomerating agent and the apparent self-defeating nature of using oil as a binding agent ; at the same time the use of coal is being advocated in so many countries as a replacement for oil. The use of an oil-agglomerated feedstock for COM certainly negates these objections regardless of their merits.

In recent years, concern for the quality of our environment has led to increasingly strict regulations regarding the components of coal. One such component, sulfur, has been identified as a major contributor to air pollution from coal combustion. Because of this, much effort has been put into finding efficient means for controlling sulfur oxide emissions from coal combustion sources. Obviously, the sulfur could be removed before, during, or after combustion. Choosing when to remove the sulfur, however, must be based upon the overall efficiency and economics involved in the utilization cost. Removing the sulfur from coal prior to combustion leads not only to a clean fuel but also to a marketable feedstock for uses other than combustion, since cleaning coal before use allows control of many of its components, not just sulfur.

As discussed by Dr. Wheelock, chemical desulfurization of coal, a newly emerging technology for removing environmentally hazardous components, particularly sulfur, from coal prior to combustion, is being developed in the U.S. While chemical desulfurization looks promising, its merits have not yet been adequately proved nor evaluated.

Chemical coal desulfurization technology can logically be separated into two basic groups. First are those original processes that were developed to remove only the pyritic sulfur from the coal. Such processes received very limited support, often self-generated. Second are the second-generation processes that have been developed and, in fact, have been demonstrated to remove both the pyritic and organic sulfur from coal. It is the ability of these newer processes to remove organic sulfur that differentiates them from other precombustion desulfurization techniques. Such processes have the potential for

meeting sulfur removal requirements sufficiently to eliminate the need for expensive stack gas scrubbers.

Since regulations define the permissible levels of sulfur dioxide emissions from coal combustion sources and, hence, define the relative worth of any process for removing sulfur from coal prior to combustion, changes in the regulations can affect process evaluation greatly. In 1971, the New Source Performance Standards set a ceiling of 1.2 pounds of SO_2 per million Btu. Under this standard, any coal with sulfur content equal to, or less than, that ceiling, could be burned without further reduction of the sulfur emissions. Coals which could meet the standard were termed « compliance coals ». On this basis, the goal of chemical desulfurization is to reduce the sulfur content of the particular coal to a level sufficient to make the coal a « compliance coal ». For all presently existing power plants, compliance coal, when obtainable, is still the best solution to sulfur emissions control. However, the Environmental Protection Agency has recently promulgated new source performance standards that require all new plants to remove 90 percent of the potential sulfur emission regardless of the sulfur content of the coal being used at that plant. For these new facilities, the concept of compliance coal is nonexistent unless chemical desulfurization processes can be developed to meet the sulfur removal requirements of the 1979 New Source Performance Standards.

We feel this is a realistic goal for chemical desulfurization technologies since several newly developed processes, such as the General Electric Process and the TRW Gravimelt Process discussed in Dr. Wheelock's paper, have been shown to remove in excess of 70 percent of the total sulfur from coal. Even when a compliance coal cannot be attained by chemical cleaning, a significant percentage of sulfur removal by chemical cleaning, followed by a low-cost reliable dry flue gas desulfurization treatment, may prove to be the most economically viable system for sulfur emission control.

The benefits that can be derived from chemical desulfurization stem not only from the sulfur reduction obtained but also from its role as an integral part of the total coal preparation cycle. Chemical desulfurization provides a custom tailored feedstock whose benefits include low sulfur content, uniform fuel quality and composition, reduced trace element content, and an environmentally safe fuel for industrial use. Of particular benefit for boiler operation, the reduced ash content and ability to control the composition of coal can lead to decreased operation and maintenance costs. However, there are some economic penalties associated with chemical desulfurization, including the added fuel costs due to processing and some potential waste disposal problems. These problems do not represent major technical barriers, although they will impact on the overall commercial potential of any given process and must be considered when evaluating these processes.

The eventual commercial success of any chemical desulfurization process will obviously depend, to a large extent, on the economics of such processes. Recent cost estimates based on conceptual process designs have indicated costs on the order of $ 1 to $ 1.50 per million Btu for several of the chemical desulfurization processes described in Dr. Wheelock's paper. Cost estimates for flue gas desulfurization all indicate a price on the order of $ 1 to $ 1.50 per million Btu [3]. This suggests, at least on a preliminary basis, the economic competitiveness of chemical desulfurization with flue gas scrubbing. It should be pointed out that although the costs are comparable, the extent of desulfurization is different. Wet flue gas desulfurization systems normally can be expected to remove 85 percent or more of the sulfur oxides from the flue gas, while the best chemical desulfurization processes have only demonstrated maximum sulfur removals of 70 to 80 percent. Flue gas desulfurization systems are notoriously poor on operability and this leads to either reduced boiler capacity or illegal emission levels. On the other hand, chemical desulfurization will provide a clean fuel that will improve the efficiency of boiler operation, allowing full capacity to be utilized while also controlling emissions. Presently, studies are being made to assess the cost benefits associated with burning clean coal versus raw coal.

From Australia, a paper by Messrs. Lyman and Chesher discusses the design, calibration, and performance of an onstream analyzer called Ashscan. This instrument is to be used for monitoring ash content of slurries of fine-size coal, such as would normally be washed in froth flotation cells. One of the difficulties in achieving high accuracy in ash measurement lies in the fact that the absorbtivity of ash (a heterogeneous substance containing a large number of compounds in varied proportions) is highly variable from sample to sample within a seam. The authors' test results showed a maximum error of ± 20 percent when the ash content in dilute slurries was measured. However, they claim that such an accuracy is adequate for process control purposes, although not sufficient for quality control of the product. The initial tests of Ashscan for process control of froth flotation have shown promise.

In the United States today, automation of coal preparation facilities with monitoring and control of raw coal feed-forward and product feedback is almost nonexistent. There is a growing awareness, however, that manual control of preparation plant operation becomes more impractical and less efficient as raw coals simultaneously become finer, dirtier, and wetter while market requirements become more stringent.

In fairness to competent plant operators who struggle to maximize yield without the aid of instruments or computers, the task is beyond the manual control level.

In the U.S., the Electric Power Research Institute and the Department of Energy are sponsoring programs with an ultimate goal of a fully automated coal preparation plant. While some instrumentation development is still required, the fact is that there is a worldwide effort in instrument development. The National Coal Board reportedly has about seven coal preparation plants on-line with some type of computer control. It is now the Board's policy that all new plants will utilize computers rather than hard-wiring. In West Germany, work is being carried out in the development of automation, instrumentation, and control systems. One German firm has a system for closed-loop control of a jig via measurement of the ash content in one of the clean coal output streams.

The paper by Mr. Kato of the Mitsui Coal Mining Company of Japan describes, in detail, a pressure flotation process for waste water treatment. This process has been successfully used at the Matsui Preparation Plant since May 1976. This is the first application of pressure flotation technology in a coal preparation plant. It may be that dewatering and waste water treatment have provided more new innovative processes and technology changes than any other phase or unit operation of coal preparation, including the actual cleaning step. The reasons for this emphasis are generally of economic or environmental origin and are often a direct outgrowth of the ever decreasing size consist of the raw coal being received at the preparation plants.

In the U.S., it is becoming increasingly difficult, if not impossible, to obtain a permit to discharge thickener underflow into a sludge (black water) pond. This regulatory demand for totally closed water circuits has led to the adoption, in the U.S. washeries, of plate filters and continuous belt pressure filters, technologies generally introduced into European washeries, plus the development of new thickeners and new high-molecular weight flocculants. The process described by Mr. Kato is an excellent example of the type of technological developments that future plants may require.

I am cognizant of the fact that coal preparation is not as widely used in the U.S. as it is in many of the nations represented at this conference, but I am confident that the merits of the technology will be recognized and its use accelerated in the U.S.

REFERENCES

[1] Gottfried, Byron S. Computer Simulation of Coal Preparation Plants. EPA-600/7-78-221, Nov. 1978. EPA/DOE, 235 pp.

[2] Baker, Albert F., Robert E. McKeever, and Albert W. Deurbrouck. Upgrading Lignite to Enhance Fuel Value. Presented at the 1980 American Mining Congress International Coal Show. Coal Preparation I Session, Chicago, Illinois, May 6, 1980.

[3] McGlamery, G.G., T.W. Tarkington, and S.V. Tomlinson. Economic and Energy Requirements of Sulfur Oxide Control Processes. Presented at the Flue Gas Desulfurization Symposium, Las Vegas, Nevada, May 5-8, 1980.

Coal Utilisation

Dr. A. D. DAINTON *

INTRODUCTION

The papers on coal utilisation at this conference deal with a wide range of applications, but it is not surprising to find in them a number of strong common themes and objectives :

1) the direct substitution of coal for fluid fuels
2) overall energy conservation by the improvement of efficiency
3) protection of the environment.

Most of the papers deal with some aspect of the combustion of coal, and although they are status reports on R & D programmes, it is noteworthy that some of the technologies discussed are already being applied in practice, or could be applied in the relatively near future.

The other main class of coal technology, conversion to fluid fuels, will be essential for the supply of special markets such as transport fuels, but such processes are still some way off from commercial application. If coal utilisation is to increase at the rates suggested at the recent Venice Summit Meeting, then it must be, over the next two decades, mainly in direct use as a source of heat, and this is the dominant theme of the papers in this session.

This general report seeks to summarise the main features of the papers, but it does not necessarily discuss each paper separately. Topics are reviewed in the context of a number of market areas, arranged in order of probable market size. Within each market area, information from a number of the papers may be summarised and discussed, so that topics of common interest can be emphasised, and direct comparisons between the various national R & D programmes can be made.

* Director, Coal Research Establishment, National Coal Board, Stoke Orchard, Cheltenham, Glos. GL 52 4RZ, Great Britain.

POWER GENERATION

Pulverised-fuel Firing

Most coal-fired power stations are fired by pulverised-fuel, and there is very wide interest in the control of pollution by these plants. Japan has some of the most rigorous pollution-control legislation, and Kimura et al (1) review progress in the control of the emissions of the oxides of nitrogen and sulphur, and of particulates.

In seeking methods for controlling NO_x, a wet process for simultaneous removal of NO_x and SO_x has been tested, but was abandoned because of complexity, and presumably high cost. Selective catalytic reduction of NO_x by ammonia has been found to be satisfactory, and a fixed bed of catalyst is preferred to a moving bed of pellets, because of the tendency of the latter to become blocked by fine dust. With the fixed bed system, dust can be removed either before or after the catalytic reactor.

For SO_x control, two processes have been found satisfactory. The first is limestone scrubbing with gypsum recovery, the stack-gas being re-heated in a recuperative heat exchanger to avoid the use of an after-burner. The second favoured method is dry SO_2 removal by an activated carbon, with recovery of elemental sulphur. This process is claimed also to remove NO_x.

For control of particulates, new devices for improvement of electrostatic precipitators (ESP) are referred to, but no operating experience is mentioned. When ammonia is being used to control NO_x, ammonium salts may cause problems in the operation of bag filters and could necessitate care in the disposal of collected ash and the residues of flue gas desulphurisation (FGD). The authors favour a biological denitrification process for treatment of aqueous effluents.

The authors rightly stress the importance of testing integrated systems in which all three groups of pollutants are removed. They describe three integrated clean-up systems which are to be tested.

In the first, which is termed the low-dust de-nitrification system, the off-gases from the boiler pass first through a hot ESP, then the selective catalytic reduction reactor to reduce NO_x, followed by the air preheater and finally a wet FGD system with recuperative reheat of the stack-gas. The authors would favour this method if a clean-up system had to be built today. Tests on a 250 MW boiler are scheduled to start in June 1981.

The two other options are also to be tested. In the high-dust de-nitrification system, the ESP is situated down-stream of the air-preheater, and there is a provision for treatment of ammonium salts in the collected ash.

The third option is the dry flue-gas desulphurisation system. Boiler off-gases flow first through the air preheater and a primary dust collector. Ammonia is added, and the mixture then passes over active carbon, removing both SO_x and NO_x, followed by a bag filter clean-up of particulates before the gases are rejected at the stack. The Government of Japan plans to test this system in a 125 MW coal-fired plant.

The Japanese work has many common features and objectives with the EPRI programme on air quality control, described in the paper by Balzheser and Loth (2). For control of NO_x, EPRI are working on prototypes of low NO_x combustors, and investigation of catalytic NO_x removal from flue gases will start this year in a new 2.5 MW integrated emission control demonstration unit.

In the field of flue-gas desulphurisation, EPRI has major efforts in the investigation of four processes. One of these, the aqueous carbonate process, has been satisfactorily developed at the 5 MW scale, and a demonstration project on the 100 MW scale is scheduled to start in 1982.

EPRI work on the control of particulates centres on the improvement of electrostatic precipitators, with particular emphasis on the collection of submicron particles. Methods under development include a high intensity ioniser, fine particle agglomeration, new gas-conditioning additives, and optimisation of rapping techniques. A commercial-scale ioniser is currently being tested at one of the stations of the Tennessee Valley Authority. Other work is on the evaluation of filter bags, which may prove to be cheaper and more reliable than ESP's with coals of high resistivity ash.

EPRI see improved methods of coal cleaning as a way of increasing boiler reliability and availability, and an aid to better control of emissions. This programme includes the design, construction, and operation of a highly flexible coal-cleaning facility to process 4 - 20 t/h of steam coals, and construction is expected to be complete by mid-1981. There is also a programme of evaluation of a 1200 t/h coal-cleaning plant which produces two products of 0.9 % S and 2.2 % S respectively.

Coal-oil Mixtures

If coal is to replace oil in power generation and large industrial applications, can existing boilers be adapted to coal-burning or must we build new coal-fired plant ? The problems of retrofitting a boiler designed for oil to burn coal are formidable in the extreme, and an attractive partial solution is offered by the use of coal-oil mixtures (COM). The US Department of Energy (DOE) programme on COM is described in the paper by Voelker and Freeman (3).

The DOE programme recognises that conversion to complete coal firing is preferable, but, when such a conversion is not achievable then COM technology would permit the maximum practical amount of coal to be substituted for oil. The use of COM may necessitate derating the boiler, because of change in the flame characteristics and temperature distributions, and the deposition of coal ash heat transfer surfaces.

The DOE estimate of market potential for coal used in COM in the United States is about 35 m t/a, substituting for 386,000 bbl/day of oil. The geographic distribution of the market would enable the use of Appalachian coal with moderate sulphur content and high ash fusion point, properties which are favourable for use in COM while meeting environmental regulations and minimising deratings.

Of the potential US market, about one-third of the capacity was originally designed for coal, and therefore would not be expected to present any particular problems. The remaining plants, originally designed for oil, have been divided into two types :

1) Type 1, in which a number of important parameters, including the furnace heat-release rate and the superheater tube spacing, are not far removed from those of pulverised fuel boilers, and

2) Type II, designed with substantially higher heat release rates and closer superheater tube spacing.

The core of the DOE programme is a series of technical and economic demonstrations. Two large-scale demonstrations on boilers designed for coal are reported, and these have yielded useful information not only on combustion performance, but also on the preparation and transport of COM. Other tests on oil-designed boilers of types I and II are to be made in the future. World interest will certainly be very great in these crucial tests. At a pinch, a coal-designed boiler now burning oil can always be switched back to

coal. It is the oil-designed boilers which constitute the real problem. In the meantime, however, encouraging results have emerged from tests of COM in a 24,000 lb/h steam boiler at the Pittsburgh Energy Technology Centre. No tube fouling has been found in burning mixtures containing 40 % of coal. This is ascribed to low gas temperatures leaving the combustion chamber as a result of more rapid ignition than a pf flame because of the oil, and more radiation from the flame than oil, because of the presence of particulates. Emissions have been found to be those expected by addition of the separate oil and coal constituents ; that is to say, the stabilising agents employed do not give rise to additional emissions.

As well as displacing oil, COM gives an opportunity to meet local SO_2 emission requirements by combining a high sulphur coal with a low sulphur oil, or vice versa. However, the presence of the coal requires the use of a baghouse or ESP for the control of particulates.

Fluidised Bed Combustion

Developments of fluidised-bed combustion for power generation continue. The largest atmospheric pressure unit is still the 4-cell boiler at Rivesville. Voelker and Freedman (3) report that after some delays, the coal-feed system has been improved, and a 132-hour run with 3 cell operation at 75 tons of steam an hour was achieved in February this year.

DOE, in conjunction with the Tennessee Valley Authority, have sponsored conceptual designs of full-scale plant, and TVA expect to operate a 20 MW_e pilot plant in 1982. A 200 MW_e demonstration plant could be ready in 1986, and, with luck, the first full-scale fluidised bed utility plant can be completed within this decade.

EPRI are participating in this TVA programme. It is notable that primary fines recycle is preferred to a carbon burn-up cell resulting in cost savings, and EPRI are hopeful that atmospheric fluidised bed combustion will be economically competitive if the stringent environmental controls projected for the US in the mid-1980's should materialise.

Pressurised fluidised-bed combustion (PFB) offers the prospect of higher efficiencies than atmospheric systems, some advantages in SO_2 retention, and lower emissions of NO_x. At present, the main activity in the US on pressurised beds is the pilot plant being built at the Curtiss-Wright plant. This is an air heater combined cycle plant in which all the energy obtained by coal combustion goes into gases passing into a gas turbine, one third of the gas being the products of combustion in the fluidised bed, and two-thirds of the gas being air heated in stainless steel in-bed tubes. In such a system, one might have anticipated materials problems at the hot end of the submerged air-cooled tubes, but the decision to go ahead with the pilot plant implies that these problems have been solved and the development will be followed with the greatest interest.

The IEA PFB project at Grimethorpe in England is sponsored by the United States, the Federal Republic of Germany and the United Kingdom. The plant includes a 2 m square pressurised boiler, heavily instrumented, and facilities for testing the off-gases after clean-up. Construction of the plant is complete and the commissioning programme is under way.

DOE feel that, at the present stage of development, it is not possible to differentiate clearly between the economics of atmospheric and pressurised fluidised-bed systems. However, both are expected to produce electricity at a cost 10 % to 15 % less than pulverised-fuel plants with scrubbers.

Combined Heat and Power (District Heating)

The arguments in favour of district heating supplied by power stations are made in the paper by Bothe (4). Low temperature heat demand accounts for 40 % of the total primary energy consumption in the Federal Republic of Germany, and district heating from coal-fired power stations could make a significant contribution in reducing oil consumption and in making overall energy savings.

A comparison is made between a condensing power plant producing 100 MW of electricity at an efficiency of 38 %, and a district heating plant also producing 100 MW of electricity and 162 MW of saleable heat at an overall efficiency of 83 %. Moreover, the supply of heat from such a combined plant would entail the consumption of only 20 % of the fuel required by individual heating plants at the points of consumption. The environmental advantages are also considerable. In the first place, emission of pollutants would be reduced in proportion to the fuel saving. Secondly, the control of emissions can be achieved more readily in large centralised plant than in small units. Thirdly, such emissions that are made will be at greater heights and thus have less local impact. Finally, the convenience to the domestic consumer afforded by district heating cannot be bettered by any other heating system.

District heating developed rapidly in Germany in the years following the Second World War. The connected load in 1978 was 25,800 MW of heat. 78 % of heat generated was by the combined heat and power principle, and 22 % from stations supplying

heat only. Although the Federal Republic has the largest connected load in Western Europe, the specific load, i.e. per unit of population, is smaller than that in Sweden and Denmark. The largest use of district heating is found in some countries of the Eastern bloc.

A study of district heating in the Federal Republic has shown that by 1990, the demand for low temperature heat (< 200°C) will correspond to a total capacity of 431 GJ/s of which about 10 % would be supplied by existing district heating or industrial CHP installations. A further 72 % of the requirement would be technically suitable for district heating, indicating the enormous potential for expansion. The study concluded that coal will be the prime fuel source for the growth of district heating, contributing about 50 % of the total fuel, but since the completion of the study, it is now felt that because of the steep rises in the prices of oil and gas, coal will eventually play a still larger rôle.

The greatest expansion is expected to occur in the 16 large urban areas which are already supplied with district heating, but in addition there are about 50 medium-sized towns which are suitable for new installations.

Fluidised-bed firing is favoured for future developments because it can consume all grades and qualities of coal economically in an environmentally acceptable manner, and an interesting exemple of this thinking is the demonstration plant at Völklingen which is now under construction by Saarbergwerke A.G. This novel plant will employ both gas and steam turbines, and is designed for an electrical output of 220 MW and a heating output of 150 MJ/s. Steam is generated by a combination of pulverised fuel firing and an atmospheric fluidised bed, and air for the gas turbine is also heated by the fluidised bed. The overall design has the particular objective of maximising the protection of the environment

A very interesting development for the future is the construction of district heating Master Lines in the Ruhr and the Saar, connecting several areas of heat load and facilitating the use of heat from large power stations, as well as waste heat from industrial processes. For example, the Saar District Heating Master Line is to connect the main urban centres of the Saar and Sutzbach valleys, using waste heat from a Saarbergwerke coking plant and eventually heat from the new Völklingen demonstration plant and other coal-fired services. The plans for these Master Lines in both the Ruhr and the Saar are impressive and forward-looking.

The paper does not discuss capital costs. A survey made in the United Kingdom estimated it would cost £3,000 million (at 1976 prices) for the distribution mains to supply 25 % of the UK population with district heating. While there is clearly a case for a move to coal from fuel oil, it would be useful to have up-to-date capital estimates in order to make the comparison with some equally radical alternative such as nuclear power and all-electric domestic heating. It would also be interesting to know how an approach is made to the problems of matching the power and heat demands, and of supplying the low summer heat demands through an extensive pipe network, with proportionately high heat losses.

Longer-range Technologies

Balzhiser and Loth (3) describe EPRI programmes aimed at the development of combined cycle generation using coal gasification as the first step. The major project is the design, construction and operation of a 100 MW_e scale Texaco gasifier which is a pressurised entrainment system. Construction will start in 1981 and be completed by 1983. EPRI is also sponsoring tests of the British Gas fixed-bed slagging gasifier, and the two-stage atmospheric pressure entrained gasifier developed by Combustion Engineering.

In coal liquefaction technology EPRI is co-funding work on the SRC process, the H-coal process and the Exxon donor process, with the primary aim of producing a fuel for combustion turbines to meet peak and intermediate loads. Work is also under way on developing turbines for coal-derived gaseous and liquid fuels, with some emphasis on the minimisation of NO_x formation with these fuels of relatively high nitrogen content.

Finally, EPRI and DOE are supporting work on fuel cells to be used in combined cycles in conjunction with coal gasifiers.

INDUSTRIAL STEAM-RAISING

Full-scale power stations using fluidised-bed combustion may still be about a decade away, but fluidised-bed industrial boilers are entering the commercial stage now. This view is either implied or explicitly stated in the papers by Voelker and Freedman, Bothe, and Kaye (5).

Kaye describes the extensive UK programme of industrial boiler development. This had its origins in research by the National Coal Board, but in recent years several boiler manufacturers have been involved, some in collaboration with the NCB, and others making independent developments. Because the nature of fluidised beds favours a vertical geometry, most progress has been made with vertical shell boilers. In 1977, the NCB designed two such boilers, one for steam and one for hot water, and installed

them in commercial sites. Development continued over 15,000 hours of operation, mostly in the improvement of automatic start-up and load control. This programme is now completed and the boilers are to be handed over to the host companies for fully commercial operation.

Arising from the experience gained in this exercise, Vosper-Thornycroft have designed a range of vertical shell boilers. The first model, rated at 4.5 MW, has been installed in a London district heating scheme, and it is planned to install five more during this year.

Most shell boilers in use in the UK have horizontal shells, and the problem of firing such a boiler with a fluidised-bed has been approached by a number of companies in different ways. For example, Northern Engineering Industries supply fluidising air through a shallow plenum chamber lying on the bottom of the fire-tube, while Energy Equipment Ltd. use an array of horizontal sparge pipes submerged in the bed. Both companies have received commercial orders for their boilers. Vosper-Thornycroft have just constructed the first of a range of boilers in which the shell is of horse-shoe cross-section with the fluidised bed in a trough underneath. It is expected that this design will be satisfactory for boilers up to 20 MW in output.

Small water-tube package boilers, incorporating a ceramic tile air distributor are marketed by Stone-Platt Fluidfire. Two have been supplied to the US and one is currently being commissioned at a factory in England. Babcock Power Ltd. have the longest experience of fluidised beds among UK manufacturers, and they are offering water-tube boilers and boiler conversions on a commercial basis, with outputs up to 150 MW of steam. Recently Babcock's have turned their attention to packaged boilers for the smaller industrial consumer, and are constructing a composite boiler with a water-tube walled combustion chamber containing a fluidised bed, from which flue gases pass to a conventional two-pass horizontal shell. This first unit will be of 4.5 MW output, but it is hoped that the general concept will be useful up to 30 MW.

These are a few examples of the UK fluidised-bed boilers described by Kaye. Since UK legislation restricts ground-level concentrations of SO_2, but not emissions, these boilers do not incorporate sulphur retention, but where boilers are being exported, e.g. to the US, facilities for limestone addition are included. Altogether, the range of industrial boilers either building or installed in the UK vary in size from 1.2 MW to 30 MW.

Voelker and Freedman (3) list fifteen coal-fired atmospheric fluidised bed units in the United States which are relevant to industrial steam-raising. The water-tube boiler at Georgetown University (100,000 lb steam/h) was started up in the summer of 1979, and in the first six months achieved 1500 hours of operation. It is reported that availability has been excellent for a new coal-fired boiler, and 85 % sulphur retention has been attained. The Foster Wheeler Corporation is offering water-tube AFB boilers, like Babcock Contractors, in sizes ranging from 15 to 150 MW (thermal).

In smaller fire-tube boilers, the Johnston boiler company is offering boilers in the output range 3 to 15 MW. The boiler has a configuration similar to a locomotive unit. Three of these boilers are now operational in commercial sites, and it is understood that a number of others are on order. The 3 MW Johnston prototype has been operating since September 1977, and has burnt a wide range of fuels successfully, including waste materials.

One important feature of the fluidised bed is its capacity to burn low grade fuels, and two of the US units now under construction are designed to use waste material from anthracite cleaning operations. The German programme on fluidised beds includes the design of a 35 MW plant for the combustion of wastes from a coal preparation plant, and in the UK a design study has recently been completed on a furnace to burn 30 tons/h of fine tailings from froth-flotation cells.

Besides the German contribution to the Grimethorpe facility, and the Völklingen plant, which have both been mentioned earlier, the Federal Republic's programme includes five other atmospheric fluidised bed boilers, either in operation or designed, ranging in output from 6 to 145 MW. It is clear that a rapid expansion of fluidised bed firing in industrial boilers can be expected over the next few years.

PROCESS HEAT

Drying

Drying processes of various kinds are used widely in industry and agriculture and simple coal-fired furnaces can be used with advantage, particularly in applications where the hot furnace gases come into direct contact with the product to be dried and the presence of small amounts of fly-ash are acceptable. The requirements of such systems can be readily met with a fluidised-bed furnace in which bed temperature is controlled by the use of substantial quantities of excess air. Kaye reports the use of such furnaces in the UK to dry grass for cattle-food production ; five 5 MW furnaces are in operation and further units are on order. A 15 MW furnace for clay drying was recently commissioned at a cement works, and another unit has been designed for drying roadstone.

Cement Manufacture

In former times, cement kilns were almost all fired by coal, but as fuel oil became rapidly cheaper in the 1960's, much coal was displaced. The recent reversal in the trend of relative prices has meant, at least in some countries, a return to coal utilisation by the cement industry. In the United Kingdom, for example, virtually all the major cement kilns have already reverted to coal. In his paper on the situation in France, Chauvin (6) reports that a return to coal began in 1978 and that the trend is likely to continue, not only for reasons of price, but also because the cement industry wishes to ensure security of supply by diversifying its fuels.

While the trends in the UK and France are the same in the broadest sense, the practice in the two countries is markedly different. In the UK the coal is crushed at the cement works and fired immediately to the kiln, because, some 25 years ago, great concern was voiced about the hazards of transporting and storing pulverised fuel to the extent that the practice virtually disappeared. In France, however, the practice is to prepare pulverised fuel at centralised locations and distribute it to the cement works for storage and subsequent use. The capacity of storage bunkers at the crushing plant or at the cement works may be of several hundred cubic metres, and transport between the two may be by road or rail vehicles, in which risks may be incurred in loading or unloading. The problem is compounded by the fact that France imports a wide range of different coals. In every case it is therefore necessary to evaluate the chance of spontaneous heating occurring, which might lead under certain conditions to ignition or explosion.

The paper describes a number of laboratory tests used by Cerchar to characterise the reactivity and ignitability of fine coal. These include thermal analysis, adiabatic calorimetry, and isothermal calorimetry, which enable the determination of the effects of oxygen and moisture in raising the temperature. A further series of tests is used to measure the explosibility of air-borne coal dust. These include determination of the minimum ignition energy of clouds, their ignition temperature, and measurements of explosion pressure and its maximum rate of increase in a closed chamber.

Against the background of information obtained in these tests, it is possible to make safety recommendations. So far as spontaneous heating is concerned, care must be taken to avoid creating areas where fines can accumulate, in conveyors, cyclones, filters, or blind areas in bunkers. Continuous flow of air through the stock of coal must be avoided. With some coals, the oxygen content must be reduced to 1 or 2 % in order to stop spontaneous heating. The temperature of the pf should be monitored as it comes out of the crusher-drier, and while it is in storage.

Further measures should be taken to lessen the effects of an explosion if it should occur. The laboratory tests on explosions permit the correct design of explosion discs and relief valves, and the design of the building itself should take into account the possibility of an explosion and a subsequent fire.

The second part of Chauvin's paper deals with problems of coals with low volatile-matter content. With these, the risk of spontaneous heating and ignition is negligible, and the difficulty is to achieve ignition when required, using a minimum of ancillary fuel such as oil or gas. Several tests are described to measure ignitability.

In conclusion, the author recommends an intensive short-term programme of investigation, both in the laboratory and on full-scale plant, in order to provide further data relating to safety in the storage of pulverised fuel.

Recovery and Up-grading of Tar Sands

Such is the change in the fortune of coal over the last seven years that consideration is now being given to using coal as an energy source in the recovery or upgrading of other fossil fuels. For example, Voelker and Freedman (3) refer to the use of a coal-fired fluidised bed for heating refinery crude oil. Ternan et al (7) describe a study of coal as an energy source in recovering liquid fuels from tar sands.

The Canadian oil sands deposits contain about 10^{12} barrels of bitumen and heavy oil, of which about 30 % is considered recoverable. Deposits relatively near the surface can be mined by open-cast methods, followed by a hot-water separation process to recover the bitumen. Deeper deposits can be recovered by in-situ methods, either by steam injection or combustion, which permit the bitumen to be pumped to the surface. In all three cases, bitumen recovery must be followed by substantial conversion to upgrade the product. The percentage of bitumen converted to crude oil can be increased if a make-up fuel is used to provide the energy necessary for processing. For example, if no make-up fuel were employed, the steam injection route would use about one-third of the recovered bitumen to provide sufficient energy to generate the steam.

Two surface-mining plants currently in operation use natural gas for processing. The object of the present study was to assess the possible rôle of coal as an energy source, particularly as much future activity will involve in-situ recovery. The study considered all three methods of bitumen recovery, mining, steam

injection and combustion, and two methods of subsequent upgrading :

1) Flexicoking, in which lighter liquids are produced from the bitumen by carbon removal, and the byproduct coke is then converted to a low cv gas ;

2) Hydrocracking, the production of light liquids by hydrogen addition.

Hydrocracking requires more capital investment than flexicoking. On the other hand, it has the advantages of no solid by-product, a larger quantity of distillate is obtained, and the product quality is higher. Moreover, it is thought that the availability of hydrocracking plant will be greater than that of a flexicoker.

The cost of the synthetic crude, produced on the scale of 100,000 barrels per day, was then calculated for the six combinations of the three recovery techniques and the two upgrading processes. In the first five combinations, coal was considered as the make-up fuel. The combination of in-situ combustion with flexicoking requires no make-up fuel, since so much low calorific-value gas is produced that a surplus of energy must be exported in the form of electricity.

The costs of crude from the surface-mining routes are significantly cheaper than the in-situ products, largely because of lower capital costs of the recovery technique. Among the in-situ examples, the costs of steam injection and hydrocracking are marginally lower than those of other options. Since much of the tar-sand deposits are not accessible to mining techniques, this preferred combination of steam-injection with hydrocracking was re-examined, comparing the effect on the product cost of using coal, part of the bitumen, or coalbased SNG as the sources of make-up energy. It was shown that the direct use of coal was marginally cheaper than bitumen, and significantly cheaper than SNG.

It is pointed out that if this option were adopted, the coal consumption by a plant to produce 100,000 barrels per day of syncrude would amount to about 20 % of Canadian steam coal production. A number of such oil plants in the future would thus make a significant impact on Canada's demand for coal.

Since the two existing plants upgrading tar sands are stated to use natural gas as their make-up energy source, it might be useful to compare the production costs for the favoured combination, using coal and natural gas, or to know why this comparison was not made.

ACTIVE CARBON

The first paper discussed in this review, that by Kimura et al (1) describes a process for simultaneous control of SO_x and NO_x using activated carbon as a sorbent. The last paper, by Garner and Packer (8), deals with the production of such a granular active carbon from brown coal, so that every paper in this session contains some feature in common with another. Active carbon represents a relatively small market in tonnage terms, but, on the other hand, it is a high-value product.

Garner and Packer begin by describing the properties of their raw material, Victoria brown coal. It occurs in thick seams accessible to large excavating machines and is therefore relatively low in production cost. As mined, the moisture content is between 60 % and 70 %, the water being contained within an extensive pore structure. Dried to a moisture content of 15 %, it can be briquetted without a binder, and the pore structure can be modified in a controlled manner in subsequent carbonisation and activation, so that an adsorbent can be produced which is useful in a variety of applications.

Crushed briquettes were carbonised to 740°C, and it was found that an atmosphere of steam was more effective than nitrogen in activating the char. In subsequent tests, steam activation was used up to 850°C with residence times at the maximum temperature between 1/2 hour and 2 1/2 hours. The product carbons were then characterised by a number of tests including surface area, density, hardness, chemical analysis, and adsorption procedures, and these properties were compared with those of commercially available carbons derived from bituminous coals, lignite, peat and coconut shell.

The brown coal product was shown to be comparable with the commercial carbons in surface area and other properties relevant to gas-phase adsorption, and to have a superior performance in decolorising and removing contaminants from solution. The only problem is that the hardness of the product is not yet sufficient to guarantee economical regeneration.

Following the laboratory experiments, pilot-scale work over fourteen months has provided larger samples for evaluation, and design data for scale-up to a commercial plant. Current work is proceeding on improving the hardness of the original briquettes, which largely determines the hardness of the final product.

It is noted that the Grade 3 Victoria carbon, which is comparable to the commercial grades, has a benzene index of 32, which implies that its production requires gasification of 86 % of the dry coal. It would be interesting to know what importance the gas produced by activation has in the overall economics of the process.

GENERAL REMARKS

The general inference that one might draw from these papers is that significant R & D efforts are being expended in many countries on increasing the use of coal, and that good progress is being made in combustion technology and emission control. The technology is now ready for a marked expansion in coal utilisation in industrial steam raising and process heat, and several authors agree that fluidised-bed combustion has a good contribution to make.

It may be useful to consider what factors might prove impediments to a swift growth in the industrial market, and whether we are doing enough in these areas. A large-scale change to coal involves large investment in new plants, and in some countries industrial recession or high interest rates, or both, will delay such a change.

A second group of factors may be more amenable to technical solutions. If industrial consumers who have used oil for the last twenty years change to coal, there are a number of associated problems. The lower calorific value of coal, particularly when measured in terms of volume, will mean that the number of large road vehicles making fuel deliveries in urban areas will increase, and this may have an environmental effect which may cause as much concern to local residents as any problem of stack emissions.

Does the prospective customer have sufficient ground-space to stock coal, and if he does, is this space near the boiler ? We need to consider cheap and convenient systems to transfer fuel from the stockpile to the boiler feed-hopper. Further, how is the customer to remove and dispose of the ash from coal combustion ? Should coal-suppliers offer an ash-removal service as part of their business ?

The third kind of impediment is touched upon by Monsieur Chauvin in his paper. In discussing the renewed use of coal in the French cement industry, he remarks that some of the consumers have little or no experience of coal, and therefore need advice on its characteristics, and how it should be handled and used. Is this ignorance of coal going to prove a major impediment in its growth ? Are the coal-suppliers organised to give the required advice and assistance to their prospective customers ? Are our educational institutions turning out enough engineers and technologists who are familiar with the concepts of coal utilisation ?

CONCLUSION

In conclusion, I should like to congratulate the authors of the papers in this session on the progress being made in their respective fields, on the dedication and enthusiasm of the R & D scientists and engineers who have produced these encouraging results, and on the lucidity of the reports.

REFERENCES

1. Kimura T., Nakabayashi T., and Mouri K. ; Fifth International Conference on Coal Research, Düsseldorf, 1980, Vol. II, p. 313.
2. Balzhiser R.E., and Loth R.A. ; Ibid. Vol. II, p. 351.
3. Voelker G., and Freedman S. ; Ibid. Vol. II, p. 367.
4. Bothe K. ; Ibid. Vol. II, p. 281.
5. Kaye W.G. ; Ibid. Vol. II, p. 335.
6. Chauvin R. ; Ibid. Vol. II, p. 301.
7. Ternan M., Mysak L.P., Faurschou D.K., and Reeve D.A. ; Ibid. Vol. II, p. 269.
8. Garner L.J., and Packer L.J. ; Ibid. Vol. II, p. 255.

Nouvelles méthodes de fonçage de puits par congélation en Pologne

Nieuwe methoden voor het schachtboren met bevriezing in Polen

Broniskaw BARCHANSKI *

0. *INTRODUCTION*

Le fonçage des puits mobilise jusqu'à 60 % du temps nécessaire pour aménager un siège à cause des difficultés inhérentes à ces techniques particulières. Pour raccourcir la durée d'implantation d'une mine, il faut avant tout améliorer le fonçage des puits. Les conditions hydrogéologiques sont très sévères dans les mines de cuivre et de charbon ouvertes récemment en Pologne. Il a fallu le plus souvent congeler le massif. Ces derniers temps, la profondeur de congélation a dépassé 700 m. Lors du forage des trous pour la congélation, on observe toujours des déviations par rapport à la verticale, faisant craindre des déformations ou des défauts dans la tuyauterie de congélation. Dans ces conditions, le creusement exige d'observer des prescriptions rigoureuses. Compte tenu du risque de déviations des sondages de congélation, qui compromettraient la continuité du massif cylindrique congelé, on emploie actuellement les méthodes suivantes de creusement :

1) l'explosif,
2) le marteau-piqueur,
3) la découpe par taillants usinés (mineur continu),
4) la fragmentation mécanique du massif en gros blocs, à l'aide d'un marteau hydro-pneumatique.

Nous allons décrire successivement ces différentes méthodes.

0. *INLEIDING*

Het schachtboren kan tot 60 % vragen van de tijd die noodzakelijk is om een zetel aan te leggen wegens de moeilijkheden die aan deze bijzondere technieken verbonden zijn. Om een mijn kortere tijd te vestigen moet voor alles het schachtboren verbeterd worden. In de koper- en steenkolenmijnen die onlangs in Polen geopend werden zijn de hydrogeologische omstandigheden zeer streng. Meestal moest het massief bevroren worden. De laatste tijd werd er dieper dan 700 m bevroren. Bij het boren van de gaten voor de bevriezing worden altijd afwijkingen ten opzichte van de vertikaal waargenomen, waardoor vervormingen of defecten in de bevriezingsleidingen te vrezen zijn. Daarom zijn voor het delven nauwkeurige voorschriften vereist. Rekening houdend met het afwijkingsrisico van de bevriezingsboringen, die de continuïteit van het bevroren cilindrisch massief in gevaar zouden brengen, worden nu de volgende methoden gebruikt voor het delven :

1) de springstof,
2) de afbouwhamer,
3) het versnijden met beitels voorzien van carbidplaatjes (continuous miner),
4) de machinale verbrokkeling van het gesteente in grote blokken, met behulp van een hydropneumatische hamer.

Deze verschillende methodes worden nu achtereenvolgens beschreven.

* Dr inz. Instytut Projektowania i Budowy, Kopaln, AGH Krakow

1. *CREUSEMENT A L'EXPLOSIF*

On adopte un schéma de tir particulier qui désagrège suffisamment la roche et qui, en même temps, évite la détérioration des tubes congélateurs. De tous les paramètres du schéma de tir, le plus complexe est la charge à prévoir pour les trous de paroi.

On ne possède pas encore le moyen de calculer de manière certaine et exacte les charges d'explosif pour des bancs congelés.

Pour calculer avec sécurité les charges de paroi, on utilise le plus souvent la formule suivante (déduite des expériences soviétiques) :

$$Qm = 0{,}4\,\pi \times a \times r^2$$

où

Qm = quantité maximale d'explosif par trou de paroi (kg)

a = distance entre les trous de paroi (m)

r = distance réelle entre le tube congélateur et le trou le plus proche.

A partir de cette nouvelle formule, les charges par trou de paroi (épaisseur d'enlevure : 0,2 m) sont comprises entre 0,4 et 1 kg contre 1,2 kg auparavant.

2. *CREUSEMENT MANUEL*
(marteau-piqueur)

Il a été adopté lorsqu'on observait des fuites aux tuyauteries de congélation, surtout à grande profondeur. Ces fuites étaient dues en partie aux travaux à l'explosif. Pour creuser manuellement de l'ordre de 35 à 40 m de puits par mois, au diamètre de 9,2 m, il fallait une attelée de 22 à 25 hommes. Ceux-ci travaillaient dans des conditions très difficiles (bruit, vibrations), donc l'absentéisme était important. Cette méthode comporte aussi l'enlèvement des déblais par un grappin. On l'utilise en massif faiblement congelé, ou dans des roches difficilement congelables (par exemple des couches de lignite sec). On applique très souvent les deux méthodes simultanément. L'intérieur de la section est enlevé au grappin, tandis que la périphérie est abattue au marteau-piqueur.

3. *DECOUPE PAR TAILLANTS*
(mineur continu)

Le creusement par découpage mécanique (mineur continu) a démarré en 1972 dans une mine de cuivre. Le mineur continu (fig. 1) se compose de cinq éléments :

1. *DELVEN MET SPRINGSTOF*

Er wordt een bijzonder schietschema aangenomen dat het gesteente voldoende ontbindt en tegelijkertijd de beschadiging van de bevriezingsbuizen voorkomt. Van alle parameters van het schietschema is de meest ingewikkelde de bepaling van de lading nodig voor de wandgaten.

De springstofladingen voor bevroren banken kunnen nog niet op een zekere en nauwkeurige manier berekend worden.

Om met zekerheid de wandladingen te berekenen gebruikt men meestal de volgende formule (afgeleid van de sovjet proefnemingen) :

$$Qm = 0{,}4\,\pi \times a \times r^2$$

waarin

Qm = maximale hoeveelheid springstof per wandgat (kg)

a = afstand tussen de wandgaten (m)

r = werkelijke afstand tussen de bevriezingsbuis en het naaste gat.

Volgens deze nieuwe formule liggen de ladingen per wandgat (snijdiepte : 0,2 m) tussen 0,4 en 1 kg in plaats van 1,2 kg vroeger.

2. *HANDDELVEN*
(Afbouwhamer)

Het handdelven werd toegepast wanneer lekken aan de bevriezingsleidingen, vooral op grote diepte, waargenomen werden. Deze lekken waren gedeeltelijk aan de schietwerken te wijten. Om 35 tot 40 m schacht per maand, met een diameter van 9,2 m manueel te delven was een personeelsbezetting van 22 tot 25 man nodig. Deze werkten in zeer moeilijke omstandigheden (lawaai, trillingen), wat veel absenteïsme veroorzaakte. Deze methode houdt ook het weghalen van afslagstenen met een grijper in. Ze wordt gebruikt voor licht bevroren massief, of voor moeilijk bevriesbaar gesteente (bijvoorbeeld lagen droge bruinkool). De twee methodes worden dikwijls tegelijkertijd toegepast. De binnenzijde van de sectie wordt met de grijper weggehaald terwijl de periferie met de afbouwhamer wordt gewonnen.

3. *VERSNIJDEN MET BEITELS*
(continuous miner)

Het delven met mechanische versnijding (continuous miner) is in 1972 in een kopermijn begonnen. De continuous miner bestaat uit 5 elementen :

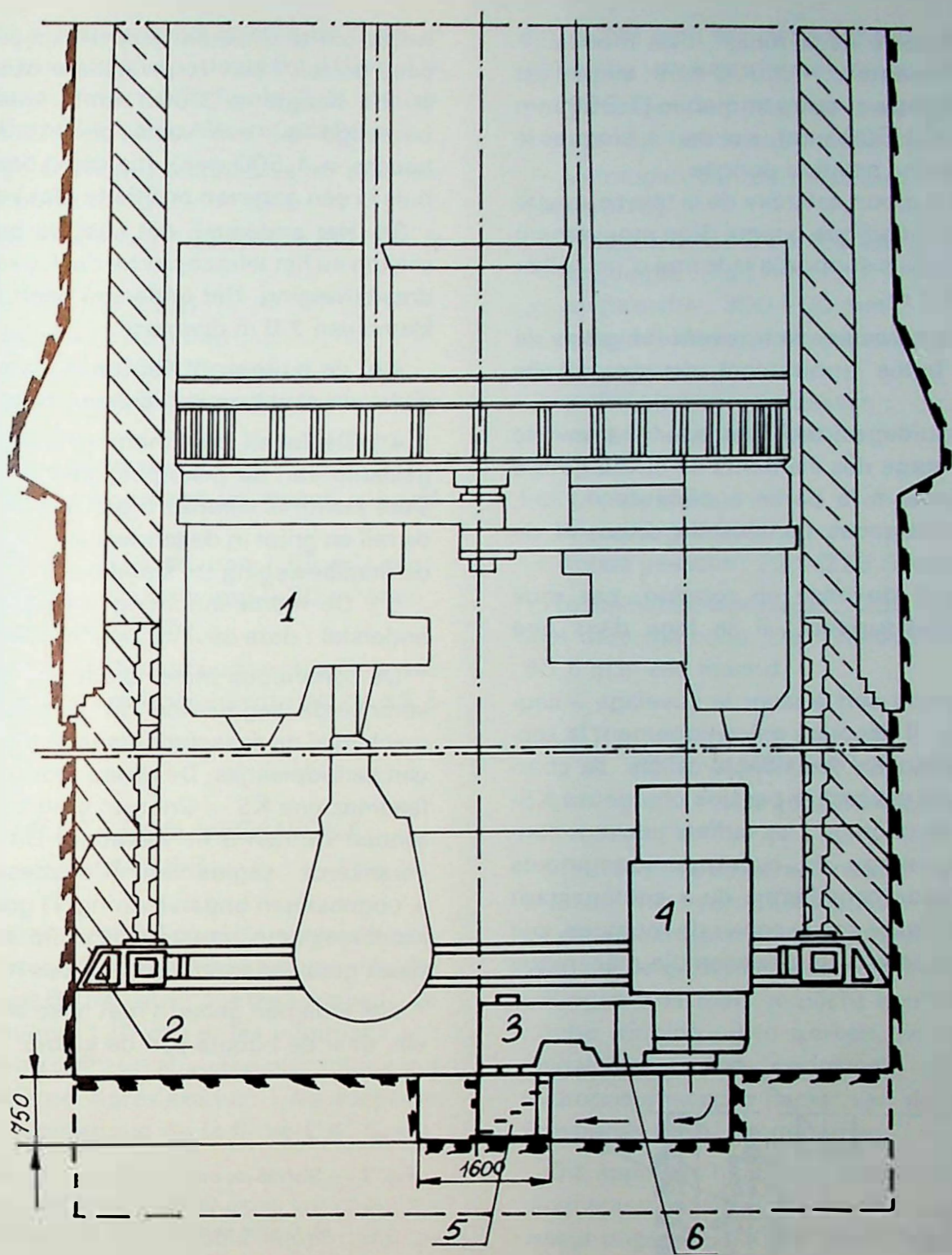

Fig. 1 — Schéma de l'installation de fonçage avec « mineur continu » KBS 2-3

1. Chargeuse - 2. Collier de montage des éléments du cuvelage - 3. Tête de coupe - 4. Elément téléscopique - 5. Tambour de coupe - 6. Moteur

Installatieschema van de afdieping met de « continous miner » KBS 2-3

1. Lader - 2. Montageklamp van de bekuipingselementen - 3. Snijkop - 4. Telescopisch deel - 5. Snijtrommel - 6. Motor

1°) Le dispositif de découpage des roches comportant un bras entraînant en rotation le tambour d'abattage équipé de taillants auto-affûtants.

2°) L'élément télescopique permettant de placer la tête d'abattage en position verticale (à l'aide de vérins hydrauliques ou d'une chargeuse KS-2n) ou en position horizontale, grâce à la fixation (par chaînes) de la tête coupante au « collier de montage » ; l'élément télescopique permet aussi de riper ce collier vers tout point désiré de la section en creusement. L'élément

1°) Het toestel voor versnijding van de gesteenten ; dit heeft een arm die de afbouwtrommel, die uitgerust is met zelfslijpende beitels doet draaien.

2°) Het telescopische deel ; dit maakt het mogelijk de snijkop hetzij vertikaal (met behulp van hydraulische vijzels of van een laadmachine KS - 2n) hetzij horizontaal te zetten omdat de snijkop aan de montageklamp bevestigd is (met kettingen). Het telescopische deel maakt het ook mogelijk de klamp naar elk gewenst punt van de sectie die gedolven

télescopique comporte deux tubes : l'un mobile (Φ 1.210 mm × 20, hauteur = 3.000 mm), auquel est fixée la tête d'abattage ; l'autre immobile (1.350 mm × 20, hauteur = 1.500 mm), qui sert à bloquer le tube mobile dans une position donnée.

3°) Le châssis-support solidaire de la tête coupante et de l'élément télescopique, animé d'un mouvement de rotation. Le châssis-support a la forme d'un collier d'un diamètre de 7 m.

A l'extérieur de ce collier se trouvent les galets de guidage et de butée qui roulent sur un rail de guidage.

4°) Le rail de guidage attaché de façon inamovible au collier de montage des éléments de cuvelage. Ce collier est boulonné à la partie supérieure du rail, engrenant avec les roues dentées du dispositif de mise en rotation.

5°) Le dispositif de mise en rotation, par roue dentée, du châssis-support ; il se loge dans une avant-saignée.

Le mineur continu sert à lever le cuvelage à segments boulonnés. Il découpe mécaniquement la section du puits au moyen de taillants usinés. Le chargement des débris est assuré par une chargeuse KS-2n avec cabine de pilotage ; les cuffats peuvent contenir 3 m³. Le levage du cuvelage à segments boulonnés (méthode canadienne du « soutènement suspendu ») est réalisé par le collier de montage, qui soulève en même temps tout l'ensemble mécanique du mineur continu.

wordt om te drukken. Het telescopische deel bevat twee buizen : een verplaatsbare buis (Φ 1.210 mm × 20, hoogte = 3.000 mm), waaraan de snijkop bevestigd is ; een vaste buis (1.350 mm × 20, hoogte = 1.500 mm), die dient om de beweegbare buis in een gegeven positie te blokkeren.

3°) Het onderstel, dat vast verbonden is met de snijkop en het telescopische deel, aangedreven in een draaibeweging. Het onderstel heeft de vorm van een klamp van 7,0 m diameter.

Aan de buitenkant van deze klamp bevinden zich de lei- en aanslagrollen die op een leirail rollen.

4°) De leirail die onafneembaar aan de montageklamp van de bekuipingselementen bevestigd is. Deze klamp is verankerd aan het bovengedeelte van de rail en grijpt in de tandwielen van de inrichting die de draaibeweging tot stand brengt.

5°) De rotatie-inrichting met tandwielen van het onderstel ; deze bevindt zich in een voorinsnijding.

De continuous miner dient om de bekuiping met verankerde segmenten op te hijsen. Hij versnijdt machinaal de schachtdoorsnede met beitels voorzien van carbidplaatjes. De afslag wordt geladen met een laadmachine KS - 2n met stuurkabine ; de afdieptonnen kunnen 3 m³ bevatten. De ophijsing van de verankerde segmenten (Canadese methode van « opgehangen ondersteuning ») geschiedt d.m.v. de montageklamp, die tegelijkertijd heel het mechanisch gedeelte van de continuous miner oplicht.

Het afdiepen gebeurt met twee sneden van 0,75 m elk, daar de hoogte van de klamp 1,5 m bereikt. Op

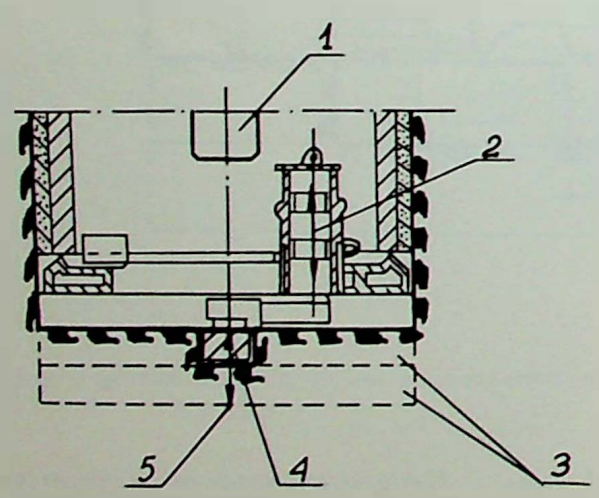

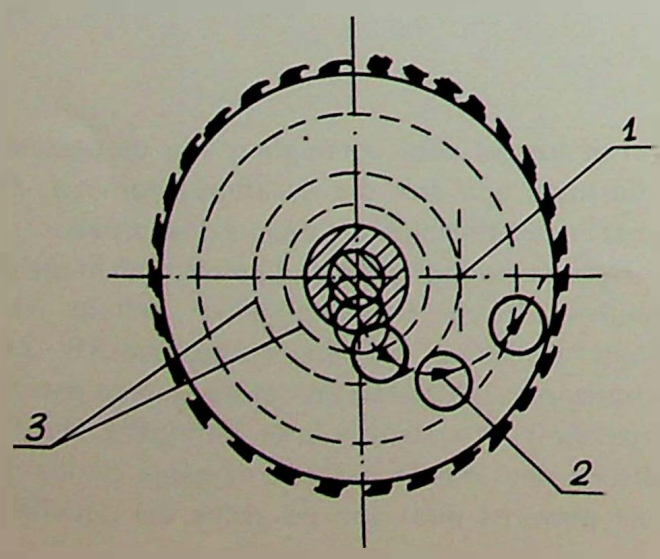

Fig. 2 — Shéma du creusement au « mineur continu »

a) Coupe verticale (vue des 2 passes)

1. Cuffat - 2. Direction suivant laquelle agit l'élément téléscopique 3. Profondeur enlevée en deux passes - 4. Choix d'une brèche centrale de marquage - 5. Forage initial en position verticale

b) Vue en plan

1. Axe de rotation du groupe de tête - 2. Forage en position horizontale - 3. Découpage par anneaux successifs

Delvingsschema met de « continuous miner »

a) Vertikale snede (afbeelding van de 2 sneden)

1. Schachtton - 2. Richting die het telescopisch deel volgt - 3. Aangesneden diepte in twee sneden - 4. Keuze van de centrale inkervingsbres - 5. Aanvangsboring in vertikale stand

b) Bovenaanzicht

1. Draaiingsas van de snijkopinrichting - 2. Boring in horizontale stand - 3. Insnijding met opeenvolgende ringen

Le creusement a lieu en deux passes de 0,75 m chacune, la hauteur du collier atteignant 1,5 m. On présente schématiquement à la figure 2 le creusement du massif (congelé) par la tête coupante.

Citons les caractéristiques techniques les plus importantes du mineur continu :

- puissance des moteurs : 125 kW + 60 kW (à 500 V) ;
- force réactive : 9 t (88,2 kN) ;
- profondeur de passe : 750 mm ;
- largeur d'enlevure : 300-700 mm ;
- vitesse moyenne de déplacement (de la tête, dans la section) : 1 m/min ;
- auto-affûtage des couteaux ;
- capacité de découpage dans un massif congelé à −6°C :
  - dans l'argile : environ 1,65 m³/min,
  - dans les graviers : environ 0,80 m³/min ;
- poids total : 23 t (225,5 kN).

Jusqu'à présent, 2.200 m de puits ont été creusés par cette méthode. L'avancement record est de 55,5 m en un mois.

4. *FRAGMENTATION MECANIQUE DU MASSIF*

L'idée de fracturer le massif congelé en gros blocs, au moyen de marteaux hydro-pneumatiques, résulte des caractéristiques du travail au marteau-piqueur. Le bruit excessif (environ 120 dB) et les vibrations ont imposé de mettre au point un abattage mécanique qui éliminerait ces défauts. Après examen, on a adopté le marteau hydro-pneumatique de la firme L.A. Grant, Pittsburgh (USA).

Cet appareil se compose d'un châssis sur chenilles sur lequel est montée une console supportant un marteau-piqueur. Le marteau pèse environ 100 kg, frappe 1.960 coups par minute, avec un moment d'impulsion de 200 Nm.

Les dimensions de l'appareil sont les suivantes :

hauteur :	2.000 mm
longueur (marteau rétracté) :	2.160 mm
largeur :	1.524 mm
poids :	4.500 kg (44.130 N).

Les essais en massif congelé ont eu lieu dans un puits de charbonnage de diamètre atteignant 9 m. Le massif se composait de lits d'argile séparés par de fins limets de poussières hydratées. La température des roches dans les parois était de 261 K (−12°C) et de 263 K (−10°C) à la surface du massif, tandis que la température de l'air dans le puits atteignait 267 K (−6°C). La partie centrale de la section a été découpée par un outil à pelles (largeur des pelles : 0,5 m).

fig. 2 ziet men een schematische afbeelding van de afdieping van een massief (bevroren) met de snijkop.

Vermelden wij hier de belangrijkste technische kenmerken van de continuous miner :

- vermogen van de motoren : 125 kW + 60 kW (aan 500 V) ;
- reactiekracht : 9 t (88,2 kN) ;
- snijdiepte : 750 mm ;
- snijbreedte : 300-700 mm ;
- gemiddelde verplaatsingssnelheid (van de kop, in de doorsnede) : 1 m/min ;
- zelfslijping van de messen ;
- versnijdingscapaciteit in het bevroren massief tot −6°C :
  - in de klei : ongeveer 1,65 m³/min,
  - in het grint : ongeveer 0,80 m³/min ;
- totaal gewicht : 23 t (225,5 kN).

Tot op heden werden er 2.200 m schacht gegraven met deze methode. De recordvooruitgang bedraagt 55,5 m in één maand.

4. *MECHANISCHE VERBROKKELING VAN HET MASSIEF*

Het idee het bevroren massief te splijten in grote blokken, met hydropneumatische hamers vloeit voort uit de arbeidskenmerken van een continuous miner. Wegens de geluidsoverlast (ongeveer 120 dB) en de trillingen was men verplicht een vorm van mechanische winning uit te werken die deze tekorten zou wegwerken. Na onderzoek heeft men de hydropneumatische hamer van de firma L.A. Grant, Pittsburgh (USA) aangenomen.

Dit apparaat heeft een onderstel op rupsen met daarop een console voor de afbouwhamer. De hamer weegt ongeveer 100 kg, geeft 1.960 stoten per minuut, met een impulsmoment van 200 Nm.

Het apparaat heeft de volgende afmetingen :

hoogte :	2.000 mm
lengte (ingetrokken hamer) :	2.160 mm
breedte :	1.524 mm
gewicht :	4.500 kg (44,130 N).

De proeven op bevroren massieven werden uitgevoerd in een steenkolenmijnschacht met een doorsnede van 9 m. Het massief bestond uit afgescheiden kleilagen met ertussen fijne gehydrateerde stofsplijtvlakken. De temperatuur van de gesteenten in de wanden bedroeg 261 K (−12°C) en 263 K (−10°C) aan het oppervlak van het massief, terwijl de temperatuur van de lucht in de schacht 267 K bereikte (−6°C). Het centrale gedeelte van de snede werd versneden met een gereedschap voorzien van schoppen (breedte van de schoppen : 0,5 m).

La partie de section proche de la paroi (environ 1 m de largeur) a été abattue au marteau à pointe. Les blocs obtenus étaient de dimensions variables : 10 à 30 cm d'épaisseur, 80 à 100 cm de largeur, 100 à 120 cm de longueur. Pour pouvoir aisément charger ces produits dans les godets, on les refendait au marteau à pointe en cubes de 25 à 50 cm de côté. Durant les essais du marteau en massif congelé, il a fallu 5 hommes à front de creusement : un homme au marteau, 3 hommes au grappin ainsi qu'un homme pour refendre les blocs. Les résultats sont ainsi comparables à ceux du creusement manuel au marteau-piqueur (10 personnes), tandis que la capacité de creusement du mineur continu est deux fois plus grande.

5. *CRITIQUE DE CES NOUVELLES METHODES DE FONÇAGE ET CONCLUSIONS*

Les méthodes de fonçage que nous venons de décrire sont utilisées dans les cas suivants :

1°) Dans les mines de minerais non ferreux, creusement manuel au marteau-piqueur ainsi que découpe par taillants usinés (mineur continu).

2°) Dans les mines de houille et de sel, on utilise surtout l'explosif et le marteau-piqueur. Cette dernière méthode sera remplacée par la fragmentation mécanique (marteau hydro-pneumatique), au terme d'une période d'essais et d'adaptation.

Les défauts et les qualités les plus importants de ces méthodes sont les suivants :

Explosif :

– Avancement mensuel maximal. Possibilité d'abattre même les roches dures.
– Risque d'endommager le manteau de roches congelées et la tuyauterie de congélation.

Creusement manuel (marteau-piqueur) :

– Elimination, ou en tout cas remarquable réduction du risque d'endommager les tubes et le manteau de congélation.
– Pour creuser un puits au diamètre de 9,2 m à terre nue, il faut accroître fortement le personnel nécessaire (22-25 ouvriers). Le bruit et les vibrations provoquent un fort absentéisme.

Découpe par taillants :

– Amélioration de la sécurité et des conditions de travail, élimination des vibrations et réduction du bruit jusqu'à 30 %. Réduction des « hors profil », les parois devenant plus lisses. Réduction de la consommation de béton.
– Les produits sont remarquablement découpés, mais au prix d'une grande consommation d'énergie électrique. Usure importante des couteaux : dans les

Het snedegedeelte dicht bij de wand (ongeveer 1 m breed) werd gewonnen met een punthamer. De bekomen blokken hadden verschillende afmetingen : 10 tot 30 cm dikte, 80 tot 100 cm breedte, 100 tot 120 cm lengte. Om makkelijk deze produkten te kunnen laden in de bakken klooft men ze met een punthamer in kubussen van 25 tot 50 cm zijde. Tijdens de proeven met de hamer in het bevroren massief, had men 5 mannen nodig bij het delvingsfront : één man aan de hamer, 3 mannen aan de grijper en één man om de blokken te klieven. De resultaten zijn dus vergelijkbaar met deze van de manuele delving met de afbouwhamer (10 personen) terwijl de delvingscapaciteit van de continuous miner tweemaal zo groot is.

5. *BESPREKING VAN DEZE NIEUWE DELVINGSMETHODES EN BESLUITEN*

De delvingsmethodes die we net beschreven hebben, worden in de volgende gevallen gebruikt :

1°) In de mijnen met niet-ijzerhoudende ertsen, manuele delving met de afbouwhamer evenals versnijding met beitels voorzien van carbidplaatjes (continuous miner).

2°) In de steenkolen- en zoutmijnen gebruikt men vooral de springstof en de afbouwhamer. Deze laatste methode zal vervangen worden door de machinale verbrijzeling (hydropneumatische hamer) na een proef- en aanpassingsperiode.

De voornaamste tekorten en pluspunten van deze methodes zijn de volgende :

Springstof :

– Maximale maandelijkse vooruitgang. Mogelijkheid om zelfs harde gesteenten te winnen.
– Het risico de mantel van de bevroren gesteenten en de bevriezingsbuizen te beschadigen.

Manuele delving (afbouwhamer) :

– Uitsluiting, of in ieder geval een aanzienlijke vermindering van het risico de buizen en de bevriezingsmantel te beschadigen.
– Om een schacht te graven met een brutodoorsnede van 9,2 m moet men het nodige personeel aanzienlijk vermeerderen (22-25 arbeiders). Het lawaai en de trillingen brengt heel veel absenteïsme met zich.

Versnijding met de beitel :

– Verbetering van de veiligheid en de werkomstandigheden, uitschakeling van de trillingen en lawaaivermindering tot 30 %. Verminderingen van de onregelmatigheden bij de versnijding en bijgevolg gladdere wanden.

roches les plus dures, on consomme jusqu'à 120 taillants par mètre de puits creusé.

Fragmentation mécanique du massif :

— Les progrès rendent cette méthode concurrentielle. Pas de vibrations. Bruit très réduit.
— Expérience et dextérité des utilisateurs insuffisantes.
— L'appareil doit être importé.

De cette analyse, il ressort que les méthodes de fonçage les plus avantageuses sont les suivantes :

a) la découpe par taillants,
b) le marteau hydro-pneumatique.

Cette dernière méthode a des chances de devenir la plus avantageuse, lorsqu'on aura fait suffisamment d'essais.

BIBLIOGRAPHIE

[1] Jastrzebski T. : Mécanisation du fonçage en massif congelé à Zaglebie Lubinsko-Glogowskie miedzi. Konferencja naukowo-techniczna, Czestochowa 1974.
[2] Longas J., Nowakowski P. : Problèmes posés par la technologie et la mécanisation lors du fonçage de puits profonds à Lgon. Konferencja naukowo-techniczna, Kokotek k/Lublina 1978.
[3] Mrozowski K. : Influence de la méthode de fonçage en massif congelé sur la vitesse de creusement des puits dans les conditions de Lgon. Magisterska Praca Dyplomowa - Instytut Projektowania i Budowy Kopaln AGH, Krakow 1975.
[4] Takuski S. : Travaux de forage et travaux à l'explosif dans les puits, Krakow 1969.
[5] Technologie et mécanisation du creusement des puits. Konferencja naukowa, ZGbSiTG, Kokotek k/Lublina, mai 1980.

— De produkten zijn zeer versneden, maar hierdoor stijgt het elektriciteitsverbruik. Belangrijke slijtage van de messen : in de hardste gesteenten verslijt men tot 120 beitels per meter gegraven schacht.

Machinale verbrokkeling van het massief :

— De vooruitgang maakt deze methode concurrerend. Geen trillingen. Zeer beperkt lawaai.
— Onvoldoende ervaring en handigheid van de gebruikers.
— Het toestel moet ingevoerd worden.

Uit deze analyse blijkt dat de volgende boormethodes de gunstigste zijn :

a) de versnijding met beitels,
b) de hydropneumatische hamer.

Deze laatste methode zal waarschijnlijk blijken de gunstigste te zijn, als men voldoende proeven zal gedaan hebben.

BIBLIOGRAFIE

[1] Jastrzebski T. : Mechanische boring in bevroren massief te Zaglebie Lubinsko-Glogowskie miedzi. Konferencja naukowo-techniczna - Czestochowa 1974.
[2] Longas J., Nowakowski P. ; Problemen van technologie en mechanisering bij het boren van diepe schachten te Lgon. Konferencja naukowo-techniczna - Kokotek k/Lublina 1978.
[3] Mrozowski K. : Invloed van de afdiepingsmethode voor bevroren massief op de delvingssnelheid van schachten voor de omstandigheden van Lgon. Magisterska Praca Dyplomowa - Instytut Projektowania i Budowy Kopaln AGH - Krakow 1975.
[4] Takuski S. : Boorwerken en schietwerken in de schachten - Krakow 1969.
[5] Technologie en mechanisering van de schachtdelving. Konferencja naukowa - ZGbSiTG - Kokotek k/Lublina - mei 1980.

Statistique des accidents survenus au cours de 1979 dans les mines de houille et dans les autres établissements surveillés par l'Administration des Mines

Statistiek van de ongevallen in de kolenmijnen en in de andere inrichtingen onder het toezicht van de Administratie van het Mijnwezen in 1979

AVANT-PROPOS

La statistique des accidents survenus au cours de l'année 1979 dans les mines de houille et dans les autres établissements surveillés par l'Administration des Mines ne comporte pas d'innovation marquante par rapport à l'année précédente.

L'Administration sera toujours reconnaissante à toute personne qui lui suggérerait des améliorations à apporter au contenu de cette étude où à sa présentation.

Le Directeur général des Mines,
ir. J. MEDAETS.

WOORD VOORAF

De statistiek van de ongevallen in de kolenmijnen en in de andere inrichtingen waarop de Administratie van het Mijnwezen toezicht uitoefent heeft in 1979 geen opvallende veranderingen ondergaan tegenover 1978.

De Administratie dankt de lezers die verbeteringen aan de vorm of de inhoud van deze studie mochten voorstellen.

De Directeur-Generaal der Mijnen,
ir. J. MEDAETS.

TABLE DES MATIERES

1. MINES DE HOUILLE
   1.1. Introduction
      1.1.1. Fond
      1.1.2. Surface
   1.2. Taux de fréquence, de gravité, de risque au fond et à la surface
   1.3. Procès-verbaux d'accidents dressés par l'Administration des Mines
   1.4. Rétrospective des accidents mortels
   1.5. Répartition des accidents graves suivant le siège et la nature des lésions
2. MINES METALLIQUES, MINIERES ET CARRIERES SOUTERRAINES
3. MINIERES ET CARRIERES A CIEL OUVERT
4. USINES — INDUSTRIE SIDERURGIQUE
5. FABRIQUES D'EXPLOSIFS

INHOUD

1. KOLENMIJNEN
   1.1. Inleiding
      1.1.1. Ondergrond
      1.1.2. Bovengrond
   1.2. Veelvuldigheidsvoet, ernst- en risicovoet in de ondergrond en op de bovengrond
   1.3. Processen-verbaal van ongevallen door de Administratie van het Mijnwezen opgesteld
   1.4. De dodelijke ongevallen tijdens de jongste jaren
   1.5. Indeling van de zware ongevallen naar de plaats en de aard van het stelsel
2. METAALMIJNEN, ONDERGRONDSE GROEVEN EN GRAVERIJEN
3. GROEVEN EN GRAVERIJEN IN DE OPEN LUCHT
4. FABRIEKEN — STAALNIJVERHEID
5. SPRINGSTOFFABRIEKEN

1. — *MINES DE HOUILLE 1979*

1.1. — *Introduction*

La statistique des accidents du travail survenus dans les mines de houille en 1979 répartit les accidents d'un part, suivant leur cause matérielle en 12 rubriques principales et 50 sous-rubriques pour les accidents du fond, 10 rubriques principales pour les accidents de surface et d'autre part, suivant l'importance de l'incapacité de travail qui comporte 4 classes de gravité : « 1 à 3 jours », « 4 à 20 jours », « 21 à 56 jours » et « 56 jours et plus ».

Le décès survenu dans un délai de 56 jours à dater de l'accident est rangé dans les accidents mortels sous la rubrique « tués ».

Le tableau n° 1 reprend les accidents du fond qui ont entraîné au cours de l'année 1979 dans chaque région minière et dans le Royaume, une incapacité de travail durant 1 jour au moins, le jour de l'accident non compris.

Le tableau n° 1*bis* reprend les accidents survenus à la surface et sur le chemin du travail, ainsi que le calcul des proportions de tués.

A noter que tous les accidents des fabriques d'agglomérés et des autres établissements connexes des houillères sont compris dans les relevés des accidents de surface des charbonnages.

Aussi les taux de fréquence et de gravité des accidents du fond, de la surface et de l'ensemble fond et surface sont ils calculés par rapport aux prestations de tout le personnel intéressé de l'entreprise, y compris celui des industries connexes.

C'est la raison pour laquelle les nombres de postes prestés au fond et surtout à la surface, tels qu'ils sont indiqués au bas du tableau n° 1*bis*, peuvent différer sensiblement des nombres de postes correspondants d'autres statistiques, lesquels ne concernent que les travaux d'exploitation de la houillère proprement dite.

1.1.1. *Fond*

Le nombre total des victimes d'accidents du fond s'est élevé en 1979 à 10.478. Il est inférieur (−0,6 %) à celui de 1978 (11.105). Comme le nombre de postes prestés convertis en postes de 8 heures a diminué, lui, de 4,3 %, le nombre de victi-

1. — *KOLENMIJNEN 1979*

1.1. — *Inleiding*

In de statistiek van de arbeidsongevallen die zich in 1979 in de steenkolenmijnen hebben voorgedaan, worden die ongevallen ingedeeld, eensdeels naar hun materiële oorzaken, in 12 hoofdrubrieken en 50 rubrieken voor de ondergrondse ongevallen en in 10 hoofdrubrieken voor de bovengrondse ongevallen en anderdeels naar de duur van de arbeidsongeschiktheid, die 4 klassen omvat : « 1 tot 3 dagen », « 4 tot 20 dagen », « 21 tot 56 dagen » en « 56 dagen en meer ».

Het overlijden binnen 56 dagen na het ongeval wordt, onder de rubriek « doden », tot de dodelijke ongevallen gerekend.

In tabel 1 worden de ondergrondse ongevallen aangegeven die in de loop van het jaar 1979 in elke mijnstreek en voor het hele Rijk een arbeidsongeschiktheid van ten minste 1 dag tot gevolg hebben gehad, de dag van het ongeval niet inbegrepen.

In tabel 1*bis* worden de bovengrondse ongevallen en de ongevallen op de weg naar en van het werk aangegeven, alsmede het aantal doden per miljoen diensten of per miljoen ton.

Alle ongevallen in brikettenfabrieken en andere nevenbedrijven van kolenmijnen zijn begrepen in de cijfers van de ongevallen op de bovengrond.

De veelvuldigheidsvoet en de ernstvoet van de ongevallen in de ondergrond, op de bovengrond en voor boven- en ondergrond samen, worden dan ook berekend op de prestaties van al het betrokken personeel van de onderneming, dat van de nevenbedrijven inbegrepen.

Daarom kan het aantal in de ondergrond en vooral op de bovengrond verrichte diensten dat in tabel 1*bis* vermeld is merkelijk verschillen van de cijfers die in andere statistieken aangeduid zijn welke alleen op de ontginning van de eigenlijke mijn betrekking hebben.

1.1.1. *Ondergrond*

In 1979 waren er in totaal 10.478 slachtoffers van ongevallen in de ondergrond. Dit is minder (−0,6 %) dan in 1978 (11.105). Aangezien het aantal diensten, in dagen van 8 uren omgerekend, in dezelfde periode met 4,3 % verminderd is, is het totaal aantal

TABLEAU n° 1 bis — *Accidents survenus dans les mines de houille en 1979*

TABEL 1 bis — *In 1979 in de kolenmijnen gebeurde ongevallen*

CATEGORIES D'ACCIDENTS	Sud / Zuiden: Victimes — Slachtoffers	Incapacités temporaires — Tijdelijke ongeschiktheid: 1 à 3 jours / 1 tot 3 dagen	4 à 20 jours / 4 tot 20 dagen	21 à 56 jours / 21 tot 56 dagen	Plus de 56 jours / Meer dan 56 dagen	Blessés avec incapacités permanentes — Gekwetsten met blijvende ongeschikth.: < 25 %	≥ 25 %	Tués — Doden
Accidents de la surface								
1 Eboulements, chutes de pierres ou de blocs de houille	1	—	—	1	—	—	—	—
2 Transport	7	—	6	1	—	—	—	—
3 Chutes de la victime	45	7	28	7	2	1	—	—
4 Maniement ou emploi d'outils, machines et mécanismes	19	2	10	6	1	—	—	—
5 Chutes d'objets et manipulation	32	8	17	4	3	1	—	—
6 Explosifs	—	—	—	—	—	—	—	—
7 Inflammations, explosions	—	—	—	—	—	—	—	—
8 Incendies et feux	—	—	—	—	—	—	—	—
9 Courant électrique	—	—	—	—	—	—	—	—
10 Divers	74	19	47	6	2	1	—	—
Total surface	178	36	108	25	8	3	—	1
Total général fond et surface	1662	273	1047	267	73	14	1	2
Accidents sur le chemin du travail								
« Accidents de trajet »	13	2	10	1	—	—	—	—

CATEGORIES D'ACCIDENTS	Nord / Noorden: Victimes — Slachtoffers	Incapacités temporaires — Tijdelijke ongeschiktheid: 1 à 3 jours / 1 tot 3 dagen	4 à 20 jours / 4 tot 20 dagen	21 à 56 jours / 21 tot 56 dagen	Plus de 56 jours / Meer dan 56 dagen	Blessés avec incapacités permanentes — Gekwetsten met blijvende ongeschikth.: < 25 %	≥ 25 %	Tués — Doden
Accidents de la surface								
1 Eboulements, chutes de pierres ou de blocs de houille	1	—	1	—	—	—	—	—
2 Transport	27	7	9	4	5	3	2	2
3 Chutes de la victime	75	22	40	8	5	6	—	—
4 Maniement ou emploi d'outils, machines et mécanismes	108	24	65	15	4	8	—	—
5 Chutes d'objets et manipulation	113	17	82	11	3	2	—	—
6 Explosifs	—	—	—	—	—	—	—	—
7 Inflammations, explosions	—	—	—	—	—	—	—	—
8 Incendies et feux	7	—	6	1	—	—	—	—
9 Courant électrique	—	—	—	—	—	—	—	—
10 Divers	55	16	37	2	—	—	—	—
Total surface	386	86	240	41	17	19	2	2
Total général fond et surface	9380	2190	6219	737	225	264	18	9
Accidents sur le chemin du travail								
« Accidents de trajet »	144	40	77	14	9	3	2	4

CATEGORIES D'ACCIDENTS	Royaume / Het Rijk: Victimes — Slachtoffers	Incapacités temporaires — Tijdelijke ongeschiktheid: 1 à 3 jours / 1 tot 3 dagen	4 à 20 jours / 4 tot 20 dagen	21 à 56 jours / 21 tot 56 dagen	Plus de 56 jours / Meer dan 56 dagen	Blessés avec incapacités permanentes — Gekwetsten met blijvende ongeschikth.: < 25 %	≥ 25 %	Tués — Doden
Accidents de la surface								
1 Eboulements, chutes de pierres ou de blocs de houille	2	—	1	1	—	—	—	—
2 Transport	34	7	15	5	5	3	2	—
3 Chutes de la victime	120	29	68	15	7	7	—	—
4 Maniement ou emploi d'outils, machines et mécanismes	127	26	75	21	5	8	—	—
5 Chutes d'objets et manipulation	145	25	99	15	6	3	—	—
6 Explosifs	—	—	—	—	—	—	—	—
7 Inflammations, explosions	—	—	—	—	—	—	—	—
8 Incendies et feux	7	—	6	1	—	—	—	—
9 Courant électrique	—	—	—	—	—	—	—	—
10 Divers	129	35	84	8	2	1	—	—
Total surface	564	122	348	66	25	22	2	3
Total général fond et surface	11042	2463	7266	1004	298	278	19	11
Accidents sur le chemin du travail								
« Accidents de trajet »	157	42	87	15	9	5	2	4

Calcul des proportions de tués	Sud / Zuiden	Nord / Noorden	Royaume / Het Rijk
Nombre de postes effectués convertis en postes de 8 heures — Fond	287 892	2 676 795	2 964 687
Surface	201 874	826 162	1 028 036
Fond et surface	489 766	3 502 957	3 992 723
Proportion de tués par million d'hommes-postes — Fond	3,47	2,62	2,70
Surface	4,95	2,42	2,92
Fond et surface	4,08	8,57	2,76
Nombre de tonnes nettes extraites	510 530	5 613 973	6 124 503
Proportion de tués par million de tonnes nettes extraites : — **Fond**	1,96	1,25	1,31
Surface	1,96	0,36	0,50
Fond et surface	3,92	1,61	1,81
Nombre de victimes par million de postes prestés — Fond	5 155	3 360	3 534

KATEGORIEEN VAN ONGEVALLEN	
Ongevallen op de bovengrond	
1 Instortingen, vallen van stenen en blokken kool	
2 Vervoer	
3 Vallen van het slachtoffer	
4 Hanteren of gebruiken van gereedschap, machines en tuigen	
5 Vallen en manipulatie van voorwerpen	
6. Springstoffen	
7 Ontvlammingen, ontploffingen	
8. Vuur en brand	
9 Elektrische stroom	
10 Allerhande	
Totaal bovengrond	
Algemeen totaal ondergrond en bovengrond	
Ongevallen op de weg naar en van het werk	
« Trajectongevallen... »	
Berekening van de verhouding van het aantal doden	
Aantal verrichte diensten omgezet in diensten van 8 uren	Ondergrond Bovengrond Ondergrond en bovengrond
Verhouding van het aantal doden per miljoen man-diensten	Ondergrond Bovengrond Ondergrond en bovengrond
Aantal netto gewonnen ton	
Verhouding van het aantal doden per miljoen nettogewonnen ton	**Ondergrond** **Bovengrond** **Ondergrond en bovengrond**
Aantal slachtoffers per miljoen verstrekte diensten	Ondergrond

mes d'accidents par million de postes prestés a augmenté de 1,3% (3.534 contre 3.580 en 1978).

Dans le nord, ce rapport était de 3.360 en 1979, contre 3.394 en 1978, soit une diminution de 1,0 %.

Dans le Sud le rapport est passé de 4.926 en 1978 à 5.155 en 1979 (+0,5 %).

Les accidents causés par les *éboulements et chutes de pierres et de blocs de houille,* restent de loin les plus nombreux et se décomposent comme suit :

— en taille :	
au cours de l'abattage et des travaux qui y font suite	2.007
au cours des travaux de contrôle du toit	342
— dans les galeries en veine de toute nature	1.064
— dans les galeries au rocher	336
— dans les puits et burquins	54
Soit au total :	3.803

La proportion d'accidents de cette nature par rapport à l'ensemble des accidents du fond s'établit ainsi à 36,3 % (en 1978 35,9 %). Cette proportion atteignait près de 50 % en 1956. Le pourcentage est le même dans le Nord que dans le Sud.

Les accidents occasionnés par le fonctionnement de *machines d'abattage, chargeuses, remblayeuses et autres machines,* ainsi que *l'emploi d'outils et la manipulation d'éléments de soutènement* ont enregistré en 1979, 1.952 cas (18,6 % du total des accidents du fond). La manipulation d'éléments de soutènement a fait 1.330 victimes contre 1.225 en 1978 (+8,5 %).

Les manipulations diverses et chutes d'objets sont aussi importantes parmi des causes d'accidents avec 2.181 victimes en 1979 contre 2.321 en 1978. La proportion des victimes d'accidents de cette catégorie ne s'est pas modifiée en 1979 (20,8 % du nombre total des accidents du fond, contre 20,9 % en 1978).

Les accidents provoqués par la circulation du personnel (chutes, heurts, foulures etc.) ont fait 1.182 victimes (11,3 % contre 10,9 % en 1978).

Les transports ont enregistré 848 victimes, soit 8,1 % de l'ensemble des accidents du fond (7,7 % en 1978).

slachtoffers van ongevallen per miljoen diensten gedaald met 1,3 % (3.534 tegenover 3.580 in 1978).

In het Noorden was die verhouding 3.360 in 1979, tegenover 3.394 in 1978, wat neerkomt op een daling met1,0 %.

In het Zuiden is er een stijging van 4.926 in 1978 tot 5.155 in 1979 (+0,5 %).

De ongevallen door *instortingen en door het vallen van stenen en blokken kool* veroorzaakt, zijn nog steeds het talrijkst en worden als volgt verdeeld :

— in pijlers :	
tijdens de winning en het vervolg van de winning	2.007
tijdens verrichtingen voor de dakcontrole	342
— in om het even welke gangen in de kolen	1.064
— in de gangen in het gesteente	336
— in schachten en blinde schachten	54
Samen :	3.803

Deze ongevallen vormen samen 36,3 % van het totaal aantal ondergrondse ongevallen (in 1978 35,9 %). In 1956 was dat bijna 50 %. Het percentage is ongeveer hetzelfde voor het Noorden en het Zuiden.

De ongevallen veroorzaakt door *winmachines, laadmachines, vulmachines en andere machines,* evenals door *het gebruik van gereedschap en de manipulatie van ondersteuningsmiddelen,* hebben in 1979 1.952 slachtoffers gemaakt (18,6 % van het totaal aantal ongevallen in de ondergrond). De manipulatie van ondersteuningsmiddelen heeft 1.330 slachtoffers gemaakt, tegenover 1.225 in 1978 (+8,5 %).

Diverse manipulaties en het vallen van voorwerpen nemen ook een belangrijke plaats in wat de oorzaken van de ongevallen betreft, met 2.181 slachtoffers in 1979 tegenover 2.321 in 1978. Proportioneel is het aantal slachtoffers van ongevallen in deze kategorie gelijk gebleven in 1979 (20,8 % van het totale aantal ongevallen in de ondergrond, tegen 20,9 % in 1978).

De ongevallen veroorzaakt door het circuleren van het personeel (vallen, zich stoten, verstuikingen, enz.), hebben 1.182 slachtoffers gemaakt (11,3 % tegen 10,9 % in 1978).

Het vervoer heeft 848 slachtoffers gemaakt, d.i. 8,1 % van het totaal aantal ongevallen in de ondergrond (7,7 % in 1978).

Sud — Zuiden

N°	Victimes Slachtoffers	Incapacités temporaires Tijdelijke ongeschiktheid				Blessés avec incapacités permanentes Gekwetsten met blijvende ongeschiktheid		Tués Doden
		1 à 3 jours 1 tot 3 dagen	4 à 20 jours 4 tot 20 dagen	21 à 56 jours 21 tot 56 dagen	Plus de 56 jours Meer dan 56 dagen	< 25 %	≥ 25 %	
010	258	34	180	32	12	2	—	—
011	90	12	61	14	3	1	—	—
012	58	9	43	6	—	—	—	—
013	50	7	31	9	3	1	—	—
014	16	3	7	6	—	1	—	—
015	21	1	17	3	—	—	—	—
016	—	—	—	—	—	—	—	—
01+	493	66	339	70	18	5	—	—
020	34	8	15	9	2	—	—	—
021	1	—	1	—	—	—	—	—
022	15	3	7	4	1	1	1	—
023	1	—	—	1	—	—	—	—
024	30	1	20	6	3	—	—	—
025	14	1	9	3	1	1	—	—
026	35	4	24	3	3	—	—	1
027	1	—	—	1	—	—	—	—
028	5	—	3	1	1	—	—	—
029	—	—	—	—	—	—	—	—
02+	136	17	79	28	11	2	1	1
030	13	—	12	1	—	—	—	—
031	2	—	1	1	—	—	—	—
032	61	10	36	11	4	1	—	—
033	39	4	26	8	1	—	—	—
034	—	—	—	—	—	—	—	—
035	30	6	19	5	—	—	—	—
036	—	—	—	—	—	—	—	—
037	43	7	27	8	1	—	—	—
038	7	1	5	—	1	—	—	—
039	2	—	—	1	1	—	—	—
03+	197	28	126	35	8	1	—	—
040	3	—	2	—	1	—	—	—
041	1	1	—	—	—	—	—	—
042	1	—	1	—	—	—	—	—
043	11	2	6	3	—	1	—	—
044	51	12	30	8	1	—	—	—
045	10	2	6	2	—	—	—	—
046	29	3	23	3	—	—	—	—
047	93	13	59	18	3	1	—	—
048	—	—	—	—	—	—	—	—
049	89	19	49	15	6	—	—	—
04+	288	52	176	49	11	2	—	—
050	75	12	44	14	5	—	—	—
051	16	1	10	5	—	—	—	—
052	9	1	6	1	1	—	—	—
053	1	1	—	—	—	—	—	—
054	1	—	1	—	—	—	—	—
055	4	1	2	1	—	—	—	—
056	47	5	23	16	3	—	—	—
057	109	11	71	21	6	1	—	—
05+	262	32	157	58	15	1	—	—
06+	—	—	—	—	—	—	—	—
07+	—	—	—	—	—	—	—	—
08a	—	—	—	—	—	—	—	—
08b	—	—	—	—	—	—	—	—
08+	—	—	—	—	—	—	—	—
09+	—	—	—	—	—	—	—	—
010+	—	—	—	—	—	—	—	—
011+	—	—	—	—	—	—	—	—
120	6	2	4	—	—	—	—	—
121	2	1	1	—	—	—	—	—
122	100	39	57	2	2	—	—	—
012+	108	42	62	2	2	—	—	—
Total Totaal	1484	237	939	242	65	11	—	—

TABLEAU n° 1 — *Accidents survenus dans les mines de houille en 1979*

CATEGORIES D'ACCIDENTS			N°
Accidents du fond			
I. — Eboulements, chutes de pierres et de blocs de houille.		En taille, abattage et suite à l'abattage	010
		En taille, contrôle du toit (foudroyage, remblayage, etc.)	011
		Dans les galeries en veine de toute nature (y compris les préparatoires): à front	012
		à l'arrière	013
		Dans les galeries en roches à front	014
		à l'arrière	015
		Dans les puits et burquins	016
		Total I	01 +
II. — **Transports** (à l'exclusion des accidents dus à l'électricité)		Continus en tailles et en galeries, par gravité	020
		courroies	021
		convoyeurs métalliques à raclettes	022
		autres convoyeurs métalliques	023
		En galeries horizontales par wagonnets et hiercheurs	024
		locomotives	025
		treuils et câbles ou chaînes, pousseurs	026
		En galeries inclinées par wagonnets et poulies ou treuils et câbles ou chaînes	027
		En tous travaux autres que les puits par tous autres moyens	028
		Dans les puits et burquins	
		Total II	02 +
III. — **Chutes de la victime** (chutes, faux pas, trébuchements, glissades, heurts ou accrochage à des parties saillantes, déchirures, foulures, luxations, etc.).		a) **A l'occasion de la circulation :**	
		— Dans les tailles et montages en plateure	030
		— Dans les tailles et montages en dressant	031
		— Dans les galeries horizontales ou faiblement inclinées	032
		— Dans les cheminées et les galeries inclinées	033
		— Dans les puits et burquins	034
		b) **Au cours d'autres opérations :**	
		— Dans les tailles et montages en plateure	035
		— Dans les tailles et montages en dressant	036
		— Dans les galeries horizontales ou faiblement inclinées	037
		— Dans les cheminées et les galeries inclinées	038
		— Dans les puits et burquins	039
		Total III	03 +
IV — Machines, outils et soutènement	**Machines**	Machines d'abattage	040
		Chargeuses	041
		Remblayeuses	042
		Autres machines et mécanismes	043
	Outils	Outils ordinaires	044
		Outils pneumatiques ou électriques à main	045
	Soutènement	Manipulation pour la mise en œuvre des bois de soutènement	046
		Manipulation pour la mise en œuvre d'étançons, cadres	047
		Manipulation pour la mise en œuvre de claveaux et de panneaux	048
		Autres manipulations d'éléments de soutènement	049
		Total IV	
V. — Chutes d'objets.		Manipulation de rails, tuyaux et autres éléments métalliques	050
		Manipulation d'autres matériaux	051
		Dérives d'objets dans les déclivités naturelles	052
		Chutes d'objets dans les puits et burquins	053
		Chutes de machines	054
		Chutes d'outils	055
		Chute de soutènement	056
		Autres chutes d'objets divers	057
		Totaal V	05 +
VI. — Explosifs (non compris les coups de grisou ou de poussières provoquées par)			06 +
VII. — Inflammations et explosions de grisou et/ou de poussières de charbon			07 +
VIII. — Dégagements instantanés, anoxies, asphyxies et intoxications par gaz naturels		a) Dégagements instantanés	08a
		b) Anoxies, asphyxies et intoxications par gaz naturels	08b
		Totaal VIII	08 +
IX. — Feux de mine et incendies			09 +
X. — Coups d'eau			010 +
XI. — Courant électrique			011 +
XII. — Autres causes		— air comprimé	120
		— survenus à la surface à des ouvriers du fond	121
		— autres causes	122
		Totaal XII	012 +
		Totaux généraux pour le fond	**Total**

N°	Victimes Slachtoffers	Incapacités temporaires Tijdelijke ongeschiktheid				Blessés avec incapacités permanentes Gekwetsten met blijvende ongeschiktheid		Tués Doden
		1 à 3 jours 1 tot 3 dagen	4 à 20 jours 4 tot 20 dagen	21 à 56 jours 21 tot 56 dagen	Plus de 56 jours Meer dan 56 dagen	< 25 %	≥ 25 %	
010	1749	457	1163	102	27	33	3	—
011	252	40	187	20	5	6	—	—
012	872	176	630	48	17	16	—	1
013	84	14	60	7	3	2	—	—
014	183	24	137	15	7	2	—	—
015	116	35	74	7	—	1	—	—
016	54	16	36	2	—	—	—	—
01+	3310	762	2287	201	59	60	3	1
020	1	—	1	—	—	—	—	—
021	101	20	67	8	6	4	—	—
022	61	11	30	13	6	7	2	1
023	28	3	15	9	—	3	—	1
024	92	8	60	15	9	10	1	—
025	147	24	87	15	20	13	5	1
026	108	23	64	16	4	7	1	1
027	50	16	27	6	1	3	—	—
028	111	21	66	17	6	9	—	1
029	13	3	7	1	2	2	—	—
02+	712	129	424	100	54	58	9	5
030	4	—	4	—	—	—	—	—
031	3	1	2	—	—	1	—	—
032	42	5	32	5	—	—	—	—
033	4	—	3	—	1	—	—	—
034	9	—	9	—	—	—	—	—
035	138	37	90	9	2	2	—	—
036	2	2	—	—	—	—	—	—
037	746	178	489	61	18	16	—	—
038	—	—	—	—	—	—	—	—
039	37	15	18	1	2	1	—	1
03+	985	238	647	76	23	20	—	1
040	22	3	10	9	—	2	—	—
041	15	2	12	1	—	—	—	—
042	1	—	1	—	—	—	—	—
043	116	17	72	23	4	5	1	—
044	401	96	288	12	5	8	—	—
045	155	48	98	7	2	3	—	—
046	109	18	79	8	4	2	1	—
047	584	111	382	73	18	34	—	—
048	35	9	21	4	1	3	—	—
049	226	56	156	12	2	3	—	—
04+	1664	360	1119	149	36	60	2	—
050	592	110	427	43	12	17	—	—
051	364	92	254	14	4	3	1	—
052	1	—	1	—	—	—	—	—
053	9	1	7	1	—	—	—	—
054	25	4	15	5	1	2	—	—
055	15	5	8	2	—	—	—	—
056	575	153	358	57	7	14	—	—
057	338	80	219	31	8	8	—	—
05+	1919	445	1289	153	32	44	1	—
06+	—	—	—	—	—	—	—	—
07+	—	—	—	—	—	—	—	—
08a	—	—	—	—	—	—	—	—
08b	—	—	—	—	—	—	—	—
08+	—	—	—	—	—	—	—	—
09+	7	7	—	—	—	—	—	—
010+	—	—	—	—	—	—	—	—
011+	13	2	9	2	—	—	—	—
120	24	11	12	1	—	1	—	—
121	73	19	48	6	—	—	—	—
122	287	131	144	8	4	2	1	—
012+	384	161	204	15	4	3	1	—
Total Totaal	8994	2104	5979	696	208	245	16	7

N°	Victimes Slachtoffers	Incapacités temporaires Tijdelijke ongeschiktheid				Blessés avec incapacités permanentes Gekwetsten met blijvende ongeschiktheid		Tués Doden
		1 à 3 jours 1 tot 3 dagen	4 à 20 jours 4 tot 20 dagen	21 à 56 jours 21 tot 56 dagen	Plus de 56 jours Meer dan 56 dagen	< 25 %	≥ 25 %	
010	2007	491	1343	134	39	35	3	—
011	342	52	248	34	8	7	—	—
012	930	185	673	54	17	16	—	1
013	134	21	91	16	6	3	—	—
014	199	27	144	21	7	3	—	—
015	137	36	91	10	—	1	—	—
016	54	16	36	2	—	—	—	—
01+	3803	828	2626	271	77	65	3	1
020	35	8	16	9	2	—	—	—
021	102	20	68	8	6	4	—	—
022	76	14	37	17	7	8	3	1
023	29	3	15	10	—	3	—	1
024	122	9	80	21	12	10	1	—
025	161	25	96	18	21	14	5	1
026	143	27	88	19	7	7	1	2
027	51	16	27	7	1	3	—	—
028	116	21	69	18	7	9	—	1
029	13	3	7	1	2	2	—	—
02+	848	146	503	128	65	60	10	6
030	17	—	16	1	—	—	—	—
031	5	1	3	1	—	1	—	—
032	103	15	68	16	4	1	—	—
033	43	4	29	8	2	—	—	—
034	9	—	9	—	—	—	—	—
035	168	43	109	14	2	2	—	—
036	2	2	—	—	—	—	—	—
037	789	185	516	69	19	16	—	—
038	7	1	5	—	1	—	—	—
039	39	15	18	2	3	1	—	1
03+	1182	266	773	111	31	21	—	1
040	25	3	12	9	1	2	—	—
041	16	3	12	1	—	—	—	—
042	2	—	2	—	—	—	—	—
043	127	19	78	26	4	6	1	—
044	452	108	318	20	6	8	—	—
045	165	50	104	9	2	3	—	—
046	138	21	102	11	4	2	1	—
047	677	124	441	11	21	35	—	—
048	35	9	21	4	1	3	—	—
049	315	75	205	27	8	3	—	—
04+	1952	412	1295	198	47	62	2	—
050	667	122	471	57	17	17	—	—
051	380	93	264	19	4	3	1	—
052	10	1	7	1	1	—	—	—
053	10	2	7	1	—	—	—	—
054	26	4	16	5	1	2	—	—
055	19	6	10	3	—	—	—	—
056	622	158	381	73	10	14	—	—
057	447	91	290	52	14	9	—	—
05+	2181	477	1446	211	47	45	1	—
06+	—	—	—	—	—	—	—	—
07+	—	—	—	—	—	—	—	—
08a	—	—	—	—	—	—	—	—
08b	—	—	—	—	—	—	—	—
08+	—	—	—	—	—	—	—	—
09+	7	7	—	—	—	—	—	—
010+	—	—	—	—	—	—	—	—
011+	13	2	9	2	—	—	—	—
120	30	13	16	1	—	1	—	—
121	75	20	49	6	—	—	—	—
122	387	170	201	10	6	2	1	—
012+	492	203	266	17	6	3	1	—
Total Totaal	10478	2341	6918	938	273	256	17	8

TABEL 1 — *In 1979 in de kolenmijnen gebeurde ongevallen*

Nr	KATEGORIEEN VAN ONGEVALLEN		
	Ongevallen in de ondergrond		
010	**I. — Instortingen, vallen van stenen en blokken kool**		In pijlers bij de winning en het vervolg van de winning
011			In pijlers, bij de dakkontrole (dakbreuk, opvulling, enz.)
			In om het even welke mijngangen in de kolen (voorbereid ingegr.)
012			aan het front
013			achter het front
014		In steengangen	aan het front
015			achter het front
016			In schachten en blinde schachten
01 +			**Totaal I**
	II. — Vervoer (met uitsluiting van de ongevallen veroorzaakt door elektriciteit)		Bestendig vervoer in pijlers en mijngangen door middel van
020			de zwaartekracht
021			bandtransporteurs
022			pantsertransporteurs
023			andere metalen transporteurs
024			In vlakke mijngangen door middel van wagentjes en sleepers
025			lokomotieven
			lieren met kabels of kettingen
026			stootinstallaties
			In hellende mijngangen door middel van wagentjes en katrollen
027			of lieren met kabels of kettingen
028			In alle werken buiten de schachten, met alle andere middelen
029			In schachten en blinde schachten
02 +			**Totaal II**
	III. — Vallen van het slachtoffer (vallen, struikelen, uitglijden, stoten tegen uitstekende delen of er blijven aan haken, scheurwonden, verstuiking of ontwrichting enz.)		a) **Bij het doorlopen :**
030			— In pijlers en ophouwen in vlakke lagen
031			— In pijlers en ophouwen in steile lagen
032			— In vlakke of licht hellende mijngangen
033			— In kokers en hellende mijngangen
034			— In schachten en blinde schachten
			b) **Tijdens andere verrichtingen :**
035			— In pijlers en ophouwen in vlakke lagen
036			— In pijlers en ophouwen in steile lagen
037			— In vlakke of licht hellende mijngangen
038			— In kokers en hellende mijngangen
039			— In schachten en blinde schachten
03 +			**Totaal III**
040	**IV — Machines, gereedschap en ondersteuning**	**Machines**	Winmachines
041			Laadmachines
042			Vulmachines
043			Andere machines en tuigen
044		**Gereedschap**	Gewoon gereedschap
045			Door perslucht of elektr. gedreven handgereedschap
046		**Ondersteuning**	Manipulatie voor het gebruik van houten ondersteuningsmiddelen
047			Manipulatie voor het gebruik van stijlen, ramen
048			Manipulatie voor het gebruik van betonblokken en panelen
049			Andere manipulaties van ondersteuningsmiddelen
04 +		**Totaal IV**	
050	**V. — Vallen van voorwerpen**		Manipulatie van spoorstaven, buizen en andere metalen stukken
051			Manipulatie van andere materialen
052			Wegschieten van voorwerpen in natuurlijke hellingen
053			Vallen van voorwerpen in schachten en blinde schachten
054			Vallen van machines
055			Vallen van gereedschap
056			Vallen van ondersteuningsmiddelen
057			Vallen van allerlei andere voorwerpen
05 +			**Totaal V**
06 +	**VI. — Springstoffen** (ontploffingen van mijngas en kolenstof veroorzaakt door springstoffen niet inbegrepen)		
07 +	**VII. — Ontvlamming en ontploffing van mijngas en/of kolenstof**		
08a	**VIII. — Gasdoorbraken : zuurstoftekort, verstikking en vergifting door natuurlijke gassen**		a) Gasdoorbraken
08b			b) Zuurstoftekort, verstikking en vergifting door natuurlijke gassen
08 +			**Totaal VIII**
09 +	**IX. — Mijnvuur en branden**		
010 +	**X. — Waterdoorbraken**		
011 +	**XI. — Elektrische stroom**		
120	**XII. — Andere oorzaken**		— Perslucht
121			— Op de bovengrond aan de ondergr. arbeid. overkomen
122			— Andere oorzaken
012 +			**Totaal XII**
Totaal			**Algemeen totaal van de ondergrond**

Le nombre d'accidents dus aux *explosifs et à l'électricité* a été de 7 au total.

On relève enfin sous la rubrique « *autres causes* » 492 accidents, dont 30 imputables à l'air comprimé et 75 survenus à la surface à des ouvriers du fond, en dehors du poste de travail proprement dit.

1.1.2. *Surface*

A la surface, le nombre d'accidents est de 564 pour le Royaume contre 589 en 1978. Le nombre d'accidents dans le Nord (386) est plus élevé que dans le Sud (178).

1.1.3. *Chemin du travail*

En 1979, il y a eu 157 accidents sur le chemin du travail contre 103 en 1978. Ces accidents ont fait quatre victimes mortelles.

1.2. — *Taux de fréquence, de gravité, de risque au fond et à la surface*

Rappelons que le nombre de journées de chômage attribuées à tout accident mortel ou ayant entraîné une incapacité permanente totale a été porté à 7.500 et que le nombre conventionnel de journées de chômage attribuées au cas d'incapacité permanente partielle est le produit de 7.500 par le taux réel d'incapacité permanente attribué définitivement par les services médicaux compétents.

Le tableau n° 2 donne les taux de fréquence et les taux de gravité des accidents survenus au fond et à la surface des mines de houille, dans le Sud, le Nord et dans le Royaume.

Le taux de fréquence — c'est-à-dire le nombre d'accidents par million d'heures de travail — a été de 439 au fond (447 en 1978) et 78 à la surface (67 en 1978).

Dans le Sud, le taux de fréquence a augmenté de 4 % au fond et de 12 % à la surface. Dans le Nord on observe une diminution du taux de fréquence au fond (−2 %) et une augmentation à la surface (+17 %).

Pour le fond, le taux de loin le plus élevé s'observe à nouveau, comme précédemment, dans le Sud : 643, dépassant de presqu'un tiers le taux relevé dans le Nord (417).

Springstoffen en elktriciteit hebben in totaal 7 ongevallen veroorzaakt.

Onder de rubriek « *andere oorzaken* » komen 492 ongevallen voor, 30 te wijten aan het gebruik van perslucht en 75 die op de bovengrond overkomen zijn aan de ondergrondse arbeiders, buiten de eigenlijke arbeidsdienst.

1.1.2. *Bovengrond*

Op de bovengrond zijn er in 1979 in heel het Rijk 564 ongevallen gebeurd, tegen 589 in 1978. In het Noorden hebben zich meer ongevallen voorgedaan (386) dan ik het Zuiden (178).

1.1.3. *Op de weg naar of van het werk*

In 1979 hebben zich 157 ongevallen voorgedaan op de weg naar of van het werk, tegen 103 in 1978. Er zijn daarbij 4 doden gevallen.

1.2. — *Veelvuldigheidsvoet, ernst- en risicovoet in de ondergrond en op de bovengrond*

Men weet dat het aantal afwezigheidsdagen, voor ieder dodelijk ongeval of voor ieder ongeval met een totale blijvende ongeschiktheid aangerekend, op 7.500 gebracht werd en dat het konventioneel aantal afwezigheidsdagen, voor de ongevallen met gedeeltelijke blijvende ongeschiktheid aangerekend, gelijk is aan het produkt van 7.500 met het door de bevoegde medische diensten definitief toegekende percentage van blijvende ongeschiktheid.

In tabel 2 worden de veelvuldigheidsvoet en de ernstvoet van de ongevallen in de ondergrond en op de bovengrond van de kolenmijnen aangeduid voor het Zuiden, voor het Noorden en voor heel het Rijk.

De veelvuldigheidsvoet, d.i. het aantal ongevallen per miljoen werkuren, beliep 439 voor de ondergrond (447 in 1978) en 78 op de bovengrond (67 in 1978).

In het Zuiden is de veelvuldigheidsvoet met 4 % toegenomen in de ondergrond en met 12 % op de bovengrond. In het Noorden is de veelvuldigheidsvoet afgenomen in de ondergrond (−2 %) en op de bovengrond toegenomen (+17 %):

Voor de ondergrond wordt het hoogste cijfer weer in het Zuiden waargenomen, nl. 643, d.i. bijna een derde meer dan in het Noorden (417).

TABLEAU n° 2. — *Taux de fréquence et de gravité des accidents survenus au fond et à la surface des mines de houille en 1979 et nombre moyen de journées chômées par accident*

TABEL 2. — *Veelvuldigheidsvoet en ernstvoet van de in 1979 in de ondergrond en op de bovengrond van de kolenmijnen gebeurde ongevallen en gemiddeld aantal verletdagen per ongeval*

	SUD — ZUIDEN		NORD — NOORDEN		ROYAUME — HET RIJK	
	Fond Ondergrond	Surface Bovengrond	Fond Ondergrond	Surface Bovengrond	Fond Ondergrond	Surface Bovengrond
Nombre de postes de 8 heures effectuées en 1979 : n / Aantal diensten van 8 uren verricht in 1979 : n	287 892	201 874	2 676 795	826 162	2 964 687	1 028 030
Nombre d'accidents chômants (y compris les cas de mort) : A / Aantal ongevallen met arbeidsverzuim (dodelijke ongevallen inbegrepen) : A	1 482	180	8 921	459	10 403	639
Taux de fréquence (1979) $T_f = \frac{A \times 10^6}{8n}$ / Veelvuldigheidsvoet (1979)	643	111	417	69	439	78
Rappel de 1978 : T_f = / Idem voor 1978 : T_f	616	99	424	59	447	67
Nombre de jours d'incapacité temporaire (à l'exclusion des cas de morts et des incapacités permanentes) : J / Aantal dagen met volledige tijdelijke ongeschiktheid (met uitsluiting van de dodelijke ongevallen met blijvende ongeschiktheid) : J	22 790	2 605	99 738	6 528	122 528	9 133
Nombre de jours conventionnels de chômage pour les cas de morts et d'incapacité permanente : / Overeengekomen aantal verloren dagen wegens dodelijke ongevallen en ongevallen met blijvende ongeschiktheid : $J' = M + \frac{P}{100} \times 7.500$	15 300	10 875	184 125	29 025	199 425	39 900
TOTAL J + J' / TOTAAL	38 090	13 480	283 863	35 553	321 953	49 033
Taux de gravité : T_g / Ernstvoet : T_g						
— sans J' rappel de 1978 ($\frac{J \times 10^3}{8n}$) / — J' niet inbegrepen	9,9	1,6	4,7	1,0	5,2	1,1
id. voor 1978 : T_g	9,3	1,1	4,6	0,8	5,2	0,9
— avec J' rappel de 1978 ($\frac{(J + J') \times 10^3}{8n}$) / — J' inbegrepen	16,5	8,3	13,3	5,4	13,6	6,0
id. voor 1978 : T_g	16,2	1,6	14,3	2,2	14,5	2,0
Nombre moyen de journées chômées par accident / Gemiddeld aantal verletdagen per ongeval						
— sans J' rappel de 1978 ($\frac{J}{A}$) / — J' niet inbegrepen	15,3	14,5	11,2	14,2	11,8	14,3
id. voor 1978 : T_g	15,2	11,4	10,8	13,8	11,5	13,1
— avec J' rappel de 1978 ($\frac{J + J'}{A}$) / — J' inbegrepen	25,7	75,9	31,8	77,5	30,9	76,7
id. voor 1978 : T_g	26,8	16,2	33,7	36,8	32,4	30,3

Pour la surface, l'écart entre les deux régions est plus important encore : 69 dans le Nord, contre 111 dans le Sud.

Pour établir *le taux de gravité* des accidents, le tableau 2 donne d'abord le nombre de jours d'incapacité temporaire totale à l'exclusion des cas mortels et des incapacités permanentes (J), et ensuite le nombre conventionnel de jours de chômage attribués à ces dernières catégories d'accidents conformément aux prescriptions de l'arrêté royal du 29 avril 1958 (J').

Ce nombre résulte en fait de la formule :

$$J' = M + \frac{P}{100} \times 7.500$$

dans laquelle

M - est le nombre d'accidents mortels qui figure au tableau 1

P - est la somme des taux d'incapacité suivants, exprimés en % :

1. des incapacités permanentes définitivement consolidées en 1979 résultant d'accidents survenus dans l'année ;
2. des prévisions d'incapacité permanente attribuées à des lésions résultant d'accidents survenus en 1979 mais dont la consolidation définitive n'était pas acquise en fin d'exercice ;
3. des différences entre les taux de consolidation définitive attribuées en 1979 à des victimes d'accidents survenus au cours d'exercices antérieurs, et les taux provisoires pris en considération pour le calcul des taux de gravité des exercices antérieurs. (1)

Ces éléments permettent d'établir le *taux de gravité* des accidents, c'est-à-dire le nombre de journées d'incapacité rapporté au nombre d'heures de travail exprimé en milliers.

Ainsi : $T_g = 1.000 \times \frac{J}{8\,n}$ ou $1.000 \times \frac{J + J'}{8\,n}$

suivant que l'on tient compte ou non du nombre de jours conventionnels de chômage attribués aux accidents ayant entraîné la mort ou une incapacité permanente.

Le premier de ces taux, qui exprime le nombre de journées perdues pour 1.000 heures de travail respectivement au fond et à la surface, montre que le chômage provoqué par les accidents du travail est en 1979 deux fois supérieur dans le Sud à celui du Nord, tant au fond qu'à la surface.

(1) Pour des raisons de simplification, cet élément du calcul n'a pas été pris en considération.

Voor de bovengrond is het verschil tussen deze twee streken nog groter : 69 in het Noorden en 111 in het Zuiden.

Om de *ernstvoet* van de ongevallen te bepalen, geeft tabel 2 eerst het aantal dagen met volledige tijdelijke ongeschiktheid, met uitsluiting van de dodelijke ongevallen en die met een blijvende ongeschiktheid (J), en daarna het overeengekomen aantal verloren dagen aan deze twee kategorieën van ongevallen toegekend overeenkomstig de bepalingen van het koninklijk besluit van 29 april 1958 (J').

Feitelijk bekomt men dit aantal door de formule :

$$J' = M + \frac{P}{100} \times 7.500$$

waarin

M - het aantal dodelijke ongevallen vermeld in tabel 1 voorstelt en

P - de som is van de hierna vermelde ongeschiktheidspercentages :

1. de in 1979 definitief gekonsolideerde blijvende ongeschiktheid voortspruitende uit ongevallen die in de loop van het jaar gebeurd zijn ;
2. de voorziene blijvende ongeschiktheden toegekend voor letsels van ongevallen die in 1979 gebeurd, maar op het einde van het jaar nog niet definitief gekonsolideerd waren ;
3. de verschillen tussen de percentages van definitieve konsolidatie in 1979 toegekend aan slachtoffers van ongevallen van voorgaande jaren en de voorlopige percentages die voor de berekening van de ernstvoeten van de vorige jaren in aanmerking genomen zijn. (1)

Aan de hand van deze gegevens kan de *ernstvoet* van de ongevallen berekend worden, d.i. het aantal dagen door ongevallen verloren per duizend werkuren, zodat :

$$T_g = 1.000 \times \frac{J}{8\,n} \text{ of } 1.000 \times \frac{J + J'}{8\,n}$$

naargelang men al dan niet rekening houdt met het konventioneel aantal verloren dagen aan dodelijke ongevallen of aan ongevallen met een blijvende ongeschiktheid toegekend.

Het eerste cijfer, dat het aantal verloren dagen per 1.000 werkuren weergeeft, eensdeels voor de ondergrond en anderdeels voor de bovengrond, toont aan dat in 1979 het aantal door arbeidsongevallen verloren dagen in het Zuiden tweemaal hoger ligt dan in het Noorden, zowel in de ondergrond als op de bovengrond.

(1) Eenvoudigheidshalve werd dit gedeelte van de berekening buiten beschouwing gelaten.

Par contre, le nombre moyen de journées chômées par accident en tenant compte des jours conventionnels, est respectivement de 31,8 dans le Nord contre 25,7 dans le Sud pour le fond et de 77,5 dans le Nord contre 75,9 dans le Sud pour la surface.

L'évolution du taux de gravité global (avec J') accuse une aggravation dans le Sud (où il passe de 16,2 à 16,5) et une amélioration dans le Nord (de 14,3 à 13,3).

Le taux de risque — sans J' — (nombre moyen de journées chômées par accident) n'a pas varié au fond dans les deux régions.

Le taux de risque avec J', pour les accidents de la surface, a augmenté sensiblement pour le Sud et dans une moindre mesure pour le Nord.

1.3. — *Procès-verbaux d'accidents dressés par l'Administration des Mines*

Les enquêtes auxquelles ont donné lieu les accidents graves survenus dans les charbonnages en 1979 ont fait l'objet de 15 procès-verbaux dressés par les ingénieurs du Corps des Mines. Les suites en sont données au tableau n° 3.

L'écart éventuel entre le nombre de procès-verbaux et celui des accidents graves et mortels mentionnés au tableau 1 s'explique comme suit :

1) certains accidents font plusieurs victimes, mais ne font l'objet que d'un seul procès-verbal d'enquête, d'où l'écart entre le nombre de procès-verbaux et le nombre de victimes mentionnés au tableau n° 3 ;

2) dans certains cas, l'incapacité de la victime a été portée à 25 % ou davantage trop tardivement pour que l'ingénieur des mines puisse utilement procéder à une enquête technique sur les causes en circonstances de ces accidents. Inversément, des enquêtes sont faites pour des accidents apparemment graves mais dont résultent finalement des incapacités permanentes partielles consolidées à moins de 25 % ;

3) les procès-verbaux de certaines enquêtes en cours à la date du 31 décembre ne sont pas encore enregistrés à cette date. En revanche, certains procès-verbaux enregistrés dans l'année peuvent se rapporter à des accidents de l'exercice précédent ;

4) certaines enquêtes sont faites pour des accidents mortels survenus dans les charbonnages fermés et qui dès lors ne sont plus repris dans la statistique, ou encore pour des accidents survenus à

Als men de overeengekomen verletdagen meerekent is het gemiddeld aantal verloren dagen per ongeval 31,8 in het Noorden en 25,7 in het Zuiden voor de ondergrond en 77,5 in het Noorden en 75,9 in het Zuiden voor de bovengrond.

De totale ernstvoet (met J') is gestegen van 16,2 naar 16,5 in het Zuiden en gedaald van 14,3 naar 13,3, in het Noorden.

De risicovoet — zonder J' — (gemiddeld aantal verloren werkdagen per ongeval) is in beide streken ongeveer gelijk gebleven in de ondergrond.

Voor de bovengrondse ongevallen is de risicovoet met J' in 1979 merkelijk gestegen in het Zuiden en in mindere mate in het Noorden.

1.3. — *Processen-verbaal van ongevallen door de Administratie van het Mijnwezen opgesteld*

In 1979 hebben de ingenieurs van het Mijnkorps 15 processen-verbaal van zware ongevallen in de mijnen opgesteld ; meer bijzonderheden daarover zijn te vinden in tabel 3.

Indien er een verschil tussen het aantal processen-verbaal en het in tabel 1 vermelde cijfer van de zware en dodelijke ongevallen is, is dat als volgt te verklaren :

1) sommige ongevallen maken verscheidene slachtoffers, maar geven slechts aanleiding tot één enkel proces-verbaal van onderzoek, zodat er een verschil is tussen het aantal processen-verbaal en het aantal slachtoffers dat in tabel 3 aangeduid is ;

2) voor sommige ongevallen wordt de ongeschiktheid van het slachtoffer te laat op 25 % of meer vastgesteld, zodat de rijksmijningenieur geen technisch onderzoek naar de oorzaken en de omstandigheden van die ongevallen meer kan instellen. Omgekeerd, wordt soms een onderzoek ingesteld voor ongevallen die zwaar lijken, maar die uiteindelijk slechts een blijvende ongeschiktheid van minder dan 25 % tot gevolg hebben ;

3) de processen-verbaal van sommige onderzoeken die op 31 december nog aan de gang zijn, zijn op die datum nog niet ingeschreven. Van de andere kant kunnen sommige processen-verbaal die in de loop van het jaar ingeschreven zijn betrekking hebben op ongevallen die het jaar te voren gebeurd zijn ;

4) sommige onderzoeken hebben betrekking op dodelijke ongevallen in gesloten kolenmijnen, die bijgevolg in de statistiek niet meer opgenomen worden, of op ongevallen waarvan personen die niet tot

TABLEAU n° 3

Accidents graves survenus dans les mines en 1979

TABEL 3

Zware ongevallen in de mijnen in 1979

RUBRIQUES	Sud Zuiden	Nord Noorden	Royaume Het Rijk	RUBRIEKEN
Nombre de P.V. d'accidents : Fond ..... Surface	 1 —	 12 2	 13 2	Aantal processen-verbaal van ongevallen : Ondergrond ..... Bovengrond .....
Total	1	14	15	**Totaal** .....
Nombre de victimes (voir tableau n° 1) : a) Tués ou blessés mortellement ..... b) Blessés grièvement	 2 —	 9 6	 11 6	Aantal slachtoffers (zie tabel 1) : a) Doden en dodelijk gekwetsten ..... b) Zwaar gekwetsten .....
Total	2	15	17	**Totaal** .....
Conclusions de l'Administration des Mines : 1) Poursuites demandées . 2) Poursuites laissées à l'appréciation du Procureur du Roi ..... 3) Recommandations de sécurité faites au charbonnage ..... 4) Classement demandé .. 5) Enquêtes en cours	 — — — 1 1	 — 2 4 — 2	 — 2 4 1 3	Konklusies van de Administratie van het Mijnwezen : 1) Vervolgingen gevraagd : ..... 2) Vervolgingen overgelaten aan de beoordeling van de Prokureur des Konings ..... 3) Aan de mijn gedane aanbevelingen betreffende de veiligheid .... 4) Klassering gevraagd .. 5) Nog lopende onderzoeken .....

des personnes étrangères aux mines dans les dépendances des mines (par exemple sur les terrils) ou encore pour des accidents dont seraient victimes dans l'enceinte des charbonnages des personnes au service d'entrepreneurs étrangers à la mine chargés de l'exécution de certains travaux.

1.4. — *Rétrospective des accidents mortels*

L'évolution du nombre de tués au fond et à la surface, en chiffres absolus et rapporté au million de postes au cours des 5 dernières années, avec rappel des données correspondantes pour 1950, 1960, 1965 et 1970 est figurée au tableau n° 4.

het mijnpersoneel behoren in de aanhorigheden van de mijnen (op steenbergen b.v.) het slachtoffer zijn of ook nog op ongevallen op het terrein van de mijn overkomen aan het personeel van aannemers die bepaalde werken uitvoeren.

1.4. — *De dodelijke ongevallen tijdens de jongste jaren*

Het aantal doden in de ondergrond en op de bovengrond tijdens de jongste 5 jaren, in volstrekte cijfers uitgedrukt en per miljoen diensten berekend, is in tabel 4 aangeduid, samen met de overeenkomstige cijfers van 1950, 1960, 1965 en 1970.

TABLEAU n° 4
Rétrospective des accidents mortels

TABEL 4
De dodelijke ongevallen tijdens de jongste jaren

Année Jaar	Nombre de tués Fond Aantal doden Ondergrond	Nombre de tués par million de postes Fond Aantal doden per miljoen diensten Ondergrond	Nombre de tués Surface Aantal doden Bovengrond	Nombre de tués par million de postes Surface Aantal doden per miljoen diensten Bovengrond	Nombre de tués Fond et surface Aantal doden Onder- en bovengrond	Nombre de tués par million de postes Fond et surface Aantal doder per miljoen diensten Onder- en bovengrond
1950	147	5,46	20	1,62	167	4,25
1960	68	4,28	4	0,59	72	3,18
1965	52	4,34	3	0,62	55	3,28
1970	19	3,70	2	0,77	21	2,72
1975	9	2,40	—	—	9	1,71
1976	7	1,99	2	1,47	9	1,84
1977	5	1,55	—	—	5	1,13
1978	8	2,58	—	—	8	1,90
1979	8	2,70	3	2,92	11	2,76

1.5. — *Répartition des accidents graves suivant le siège et la nature des lésions*

Depuis l'entrée en vigueur de l'arrêté royal du 29 avril 1958 relatif aux organes de sécurité, d'hygiène et d'embellissement des lieux de travail concernant les mines, minières et carrières souterraines, les chefs des services de sécurité et d'hygiène des charbonnages sont tenus de remplir, pour chaque accident, une « fiche d'accident » dont le contenu est défini à l'annexe 1 dudit arrêté, annexe à laquelle renvoie l'article 4.

L'arrêté ministériel en date du 19 décembre 1973, entré en vigueur le 1 janvier 1974, a modifié le contenu de la fiche d'accident dans les mines de houille afin de saisir un plus grand nombre de données relatives aux accidents, pour mieux en dégager les causes et à l'effet de prendre toutes mesures utiles pour en diminuer le nombre et la gravité. La codification a été fixée de manière à permettre l'exploitation des informations par des moyens mécanographiques et à faciliter l'élaboration des statistiques communes relatives aux victimes des accidents du fond par les Communautés européennes.

Par accident grave, l'Organe permanent entend l'accident qui a entraîné soit la mort endéans les 56 jours de sa survenance, soit une incapacité de travail *au fond* de plus de 56 jours.

1.5. — *Indeling van de zware ongevallen naar de plaats en de aard van het letsel*

Sedert het koninklijk besluit van 29 april 1958 betreffende de organen voor veiligheid, gezondheid en verfraaiing der werkplaatsen in de mijnen, graverijen en ondergrondse groeven in werking getreden is, moeten de hoofden van de diensten voor veiligheid en gezondheid van de kolenmijnen voor ieder ongeval een ongevalskaart invullen, waarvan de inhoud bepaald is in bijlage 1 van dat besluit, een bijlage waar in artikel 4 naar verwezen wordt.

Het ministerieel besluit van 19 december 1973, dat op 1 januari 1974 in werking getreden is, heeft de inhoud en de vorm van de ongevallensteekkaart gewijzigd ten einde een groter aantal gegevens over de ongevallen in te winnen, om de oorzaken ervan beter te achterhalen en de nodige maatregelen te nemen om het aantal ongevallen en de zwaarte ervan te doen afnemen. Deze wijziging werd derwijze doorgevoerd dat de gegevens met mechanografische middelen kunnen verwerkt worden en dat het opmaken van de gemeenschappelijke statistieken van de door ondergrondse ongevallen getroffenen door de Europese Gemeenschappen erdoor vergemakkelijkt wordt.

Onder zwaar ongeval verstaat het Permanent Orgaan een ongeval dat ofwel de dood van het slachtoffer binnen 56 dagen nadat het gebeurd is, ofwel een arbeidsongeschiktheid *voor de ondergrond* van meer dan 56 dagen veroorzaakt heeft.

TABLEAU n° 4 bis — Répartition des victimes des accidents du fond selon le siège, la nature, la durée d'incapacité.

TABEL 4 bis — Indeling van de ongevallen ondergronds naar de plaats en de aard van het letsel en de duur van de arbeidsongeschiktheid.

LE ROYAUME — HET RIJK

Chiffres absolus — Absolute cijfers Nombre d'heures — Aantal uren 23.717.496

1979

		Tête cou Hoofd hals	Yeux Ogen	Tronc Romp	Membres infér. | supér. Ledematen onderste	bovenste	Mains Handen	Pieds Voeten	Sièges multiples Versch. plaatsen	Non précisé Niet omschreven	Total Totaal		
Amputations et énucléations	> 56	—	—	—	—	—	4	2	1	—	7	> 56	Amputaties en enucleaties
	tué	—	—	—	—	—	—	—	—	—	—	dood	
	tot.	—	—	—	—	—	4	2	1	—	7	tot.	
Fractures	> 56	5	—	12	38	22	46	14	2	—	139	> 56	Breuken
	tué	1	—	1	—	—	—	—	1	—	3	dood	
	tot.	6	—	13	38	22	46	14	3	—	142	tot.	
Luxations, entorses, foulures	> 56	—	—	2	3	—	—	—	—	—	5	> 56	Ontwrichtingen, verstuikingen, spierverrekkingen
	tué	—	—	—	—	—	—	—	—	—	—	dood	
	tot.	—	—	2	3	—	—	—	—	—	5	tot.	
Commotions et lésions internes	> 56	1	—	1	—	—	—	—	—	—	2	> 56	Hersenschudding, inwendige letsels
	tué	—	—	1	—	—	—	—	—	—	1	dood	
	tot.	1	—	2	—	—	—	—	—	—	3	tot.	
Plaies, contusions, attritions musculaires	> 56	7	4	9	38	15	28	16	2	—	119	> 56	Wonden, kneuzingen, spierbeschadiging
	tué	—	—	—	—	—	—	—	—	—	—	dood	
	tot.	7	4	9	38	15	28	16	2	—	119	tot.	
Brûlures, effets nocifs de l'électricité, radiations	> 56	—	—	—	—	—	—	—	—	—	—	> 56	Brandwonden, schadelijke gevolgen van elektrische stroom, straling
	tué	—	—	—	—	—	—	—	—	—	—	dood	
	tot.	—	—	—	—	—	—	—	—	—	—	tot.	
Intoxications, asphyxies	> 56	—	—	—	—	—	—	—	—	—	—	> 56	Vergiftigingen, verstikkingen
	tué	—	—	—	—	—	—	—	—	—	—	dood	
	tot.	—	—	—	—	—	—	—	—	—	—	tot.	
Lésions multiples ou non précisées	> 56	—	—	—	—	—	—	1	—	—	1	> 56	Meervoudige of onbepaalde letsels
	tué	—	—	1	—	—	—	—	3	—	4	dood	
	tot.	—	—	1	—	—	—	1	3	—	5	tot.	
Total	> 56	13	4	24	79	37	78	33	5	—	273	> 56	
	tué	1	—	3	—	—	—	—	4	—	8	dood	Totaal
	tot.	14	4	27	79	37	78	33	9	—	281	tot.	

Les résultats de ce travail sont consignés dans le tableau n° 4*bis*.

L'examen de ce tableau montre que les accidents aux mains totalisent plus d'un quart des accidents graves du fond (28 %), les accidents aux jambes plus d'un quart (28 %) et aux pieds plus d'un dixième (12 %), soit ensemble près de sept dixièmes (68 %).

Quant à la nature des lésions, il convient d'abord d'observer que certaines d'entre elles (asphyxie, submersion, empoisonnement) affectent, de par leur nature même, l'ensemble du corps, tandis que d'autres ne peuvent affecter que certains « sièges » (par exemple, la perte d'un membre ne peut affecter que les membres). C'est pourquoi dans certaines colonnes, un certain nombre de lignes ont été condamnées.

Ceci étant précisé, on constatera que les fractures totalisent la moitié (49 % des accidents graves recensés et 37 % des accidents mortels tandis que les contusions, écorchures et plaies en groupent encore plus de quatre dixièmes (42 %). Ainsi ces deux « natures de lésion » rassemblent neuf dixièmes des accidents graves (91 %) et 37 % des accidents mortels. On relève également 4 accidents mortels provoqués par lésions multiples ou non précisés et un par lésions internes.

De uitslagen van dat werk zijn in tabel 4*bis* opgenomen.

Uit deze tabel blijkt dat meer dan een vierde van de zware ongevallen in de ondergrond aan de handen gebeuren (28 %), evenveel (28 %) aan de benen en een achtste (12 %) aan de voeten, d.i. samen bijna zeven tiende (68 %).

Wat de aard van de letsels betreft, dient vooreerst te worden opgemerkt dat sommige letsels (verstikking, verdrinking, vergiftiging) uiteraard op heel het lichaam betrekking hebben, terwijl andere alleen op bepaalde plaatsen kunnen slaan (zo kan het verlies van een lidmaat alleen op de ledematen slaan). Daarom zijn sommige regels in sommige kolommen weggelaten.

Na deze verduidelijking ziet men dat de breuken haast de helft (49 %) van de getelde, zware ongevallen en 37 % van de dodelijke ongevallen uitmaken en de kneuzingen, schaafwonden en andere wonden meer dan vier tiende (42 %). Deze twee « soorten letsels » maken samen dus negen tiende van de zware ongevallen (91 %) en 37 % van de dodelijke ongevallen uit. Vier sterfgevallen zijn te wijten aan meervoudige of onbepaalde letsels en één aan inwendige letsels.

2. — *MINES METALLIQUES, MINIERES ET CARRIERES SOUTERRAINES*

Le rencensement et la classification des accidents survenus dans les mines métalliques, les minières et carrières souterraines est fait par l'Administration des Mines sur les mêmes bases que pour les mines de houille. Les données du tableau 5 relatives à l'année 1979, concernent les carrières souterraines selon la définition (ardoisières, terres plastiques, marbre, tuffeau, etc.). L'unique mine de fer du pays est fermée depuis le 31 octobre 1978.

Ces établissements n'ont occupé ensemble en 1979 que 75 ouvriers, dont 33 au fond et 42 à la surface. On observe une diminution des effectifs de près de 31 % par rapport à l'année précédente.

Le nombre total d'accidents chômants a été de 18 contre 29 en 1978. Dans ces entreprises on n'a pas enregistré en 1979 d'accident ayant entraîné une incapacité permanente ou accident mortel.

Pour le fond le maniement ou emploi de machines, outils, mécanismes et soutènements ont entraîné 5 accidents ; la chute d'objets et manipulations diverses ont entraîné 2 accidents, la chute et le mouve-

2. — *METAALMIJNEN, ONDERGRONDSE GROEVEN EN GRAVERIJEN*

De telling en de indeling van de ongevallen in de metaalmijnen en in de ondergrondse groeven en graverijen worden door de Administratie van het Mijnwezen op dezelfde manier verricht als die van de ongevallen in de kolenmijnen. De in tabel 5 vervatte gegevens over het jaar 1979 betreffen de ondergrondse groeven volgens de definitie (leisteengroeven, plastische aarde, marmer, tufsteen, enz.). De enige ijzermijn van het land is sinds 31 december 1978 dicht.

Al deze inrichtingen samen hebben in 1979 slechts 75 arbeiders tewerkgesteld, 33 in de ondergrond en 42 op de bovengrond. Tegenover 1978 is het aantal tewerkgestelde arbeiders met bijna 31 % verminderd.

Er waren 18 ongevallen met arbeidsverzuim, tegenover 29 in 1978. In die ondernemingen werd in 1979 geen enkel ongeval met blijvende arbeidsongeschiktheid en geen enkel dodelijk ongeval opgetekend.

In de ondergrond waren 5 ongevallen te wijten aan het hanteren of gebruiken van machines, gereedschap, tuigen en ondersteuningsmiddelen en 2 ongevallen werden veroorzaakt door het vallen van

TABLEAU n° 5 — 1979 — TABEL 5

Accidents survenus dans les mines métalliques, les minières souterraines et les carrières souterraines.

In de metaalmijnen, ondergrondse groeven en graverijen gebeurde ongevallen.

A. FOND	Nombre de victimes ayant subi une incapacité temporaire totale: 1 à 3 jours	4 à 20 jours	21 à 56 jours	> 56 jours	Nombre total de victimes	permanente: < 25 %	≥ 25 %	Tués	A. ONDERGROND
CAUSES TECHNIQUES	Aantal slachtoffers met tijdelijke volledige arbeidsongeschiktheid: 1 tot 3 dagen	4 tot 20 dagen	21 tot 56 dagen	> 56 dagen	Totaal aantal slachtoffers	blijvende arbeidsongeschiktheid: < 25 %	≥ 25 %	Doden	TECHNISCHE OORZAKEN
I. Eboulements et chutes de pierres	—	—	—	—	—	—	—	—	I. Instortingen en vallen van stenen
II. Moyens de transport	—	—	1	—	1	—	—	—	II. Vervoermiddelen
III. Chute et mouvement de la victime	—	2	1	—	3	—	—	—	III. Vallen en bewegen van het slachtoffer
IV. Maniement ou emploi de machines, outils, mécanismes et soutènements	—	5	—	—	5	—	—	—	IV. Hanteren of gebruiken van machines, gereedschap, tuigen en ondersteuningsmiddelen
V. Chute d'objets et manipulations diverses	—	2	—	—	2	—	—	—	V. Vallen van voorwerpen en allerhande manipulaties
VI. Explosifs	—	—	—	—	—	—	—	—	VI. Springstoffen
VII. Inflammations et explosions	—	—	—	—	—	—	—	—	VII. Ontvlammingen en ontploffingen
VIII. Anoxies, asphyxies et intoxications par gaz naturel et autres	—	—	—	—	—	—	—	—	VIII. Zuurstoftekort, verstikking en vergiftiging door natuurlijke en andere gassen
IX. Feux et incendies	—	—	—	—	—	—	—	—	IX. Vuur en branden
X. Coups d'eau	—	—	—	—	—	—	—	—	X. Waterdoorbraken
XI. Electricité	—	—	—	—	—	—	—	—	XI. Elektriciteit
XII. Autres causes	—	—	—	—	—	—	—	—	XII. Andere oorzaken
Total pour le fond	—	9	2	—	11	—	—	—	Totaal voor de ondergrond

TABLEAU n° 5 (suite)

Accidents survenus dans les mines métalliques, les minières souterraines et les carrières souterraines.

1979

TABEL 5 (vervolg)

In de metaalmijnen, ondergrondse groeven en graverijen gebeurde ongevallen.

B. SURFACE	Nombre de victimes ayant subi une incapacité temporaire totale					permanente		Tués	B. BOVENGROND
	1 à 3 jours	4 à 20 jours	21 à 56 jours	> 56 jours	Nombre total de victimes	< 25 %	≥ 25 %		
CAUSES TECHNIQUES	Aantal slachtoffers met							Doden	TECHNISCHE OORZAKEN
	tijdelijke volledige arbeidsongeschiktheid					blijvende arbeidsongeschiktheid			
	1 tot 3 dagen	4 tot 20 dagen	21 tot 56 dagen	> 56 dagen	Totaal aantal slachtoffers	< 25 %	≥ 25 %		
I. Eboulements et chutes de pierres	—	1	—	—	1	—	—	—	I. Instortingen en vallen van stenen
II. Transports	—	—	—	—	—	—	—	—	II. Vervoermiddelen
III. Maniement ou emploi d'outils, machines et mécanismes	—	5	—	—	5	—	—	—	III. Hanteren of gebruiken van gereedschap, machines en tuigen
IV. Chutes d'objets et manipulations	—	—	1	—	1	—	—	—	IV. Vallen van voorwerpen en manipulaties
V. Chute et mouvements de la victime	—	—	—	—	—	—	—	—	V. Vallen en bewegen van het slachtoffer
VI. Inflammations, explosions, asphyxies et intoxications	—	—	—	—	—	—	—	—	VI. Ontvlammingen, ontploffingen, verstikking en vergiftiging
VII. Feux et incendies	—	—	—	—	—	—	—	—	VII. Vuur en branden
VIII. Explosifs	—	—	—	—	—	—	—	—	VIII. Springstoffen
IX. Electricité	—	—	—	—	—	—	—	—	IX. Elektriciteit
X. Autres causes	—	—	—	—	—	—	—	—	X. Andere oorzaken
Total pour la surface	—	6	1	—	7	—	—	—	Totaal voor de bovengrond
Total fond + surface	—	15	3	—	18	—	—	—	Totaal onder- en bovengrond
C. ACCIDENTS SUR LE CHEMIN DU TRAVAIL	—	—	—	—	—	—	—	—	C. ONGEVALLEN OP DE WEG NAAR EN VAN HET WERK

ment de la victime ont entraîné 3 accidents, les moyens de transport ont entraîné 1 accident.

Pour la surface le maniement ou l'emploi d'outils, machines et mécanismes ont entraîné 5 accidents, les chutes d'objets et les manipulations 1. Il y a aussi 1 accident dus aux éboulements et chutes de pierres.

3. — *MINIERES ET CARRIERES A CIEL OUVERT*

Jusqu'à présent, seuls les accidents mortels survenus dans les minières et carrières à ciel ouvert font l'objet d'une statistique. Elle comporte les mêmes rubriques principales que celle des accidents survenus dans les mines, ainsi qu'il résulte du tableau n° 6 A.

En 1979, il y a eu 8 accidents mortels contre 3 en 1978. Il y a eu 4 accidents à la rubrique éboulements et chute de pierres, 2 accidents au transport, 1 accident à la rubrique manipulations et chutes d'objet et 1 accident à la rubrique chute de la victime.

voorwerpen en allerhande manipulaties, 3 ongevallen waren te wijten aan het vallen of bewegen van het slachtoffer en 1 aan vervoermiddelen.

Op de bovengrond waren 5 ongevallen te wijten aan het hanteren of gebruiken van gereedschap, machines en tuigen; 1 ongeval werd veroorzaakt door het vallen van voorwerpen en manipulaties en eveneens 1 ongeval door instortingen en vallende stenen.

3. — *GROEVEN EN GRAVERIJEN IN DE OPEN LUCHT*

Tot dusver wordt alleen de statistiek van de dodelijke ongevallen in de groeven en de graverijen in de open lucht opgemaakt. De hoofdrubrieken zijn dezelfde als voor de ongevallen in de mijnen, zoals uit tabel 6 A blijkt.

In 1979 waren er 8 dodelijke ongevallen, tegen 3 in 1978. Daarvan zijn er 4 veroorzaakt door instortingen en vallende stenen, en 2 door het vervoer, 1 door manipulaties en vallende voorwerpen en 1 door het vallen van het slachtoffer.

TABLEAU n° 6A

Accidents mortels dans mes minières et carrières à ciel ouvert

TABEL 6 A

Dodelijke ongevallen in de graverijen en groeven in de open lucht

1979

Catégories d'accidents	Royaume Het Rijk Nombre de tués Aantal doden	Kategorieën van ongevallen
1. Eboulements, chutes de pierres ou de blocs	4	1. Instortingen, vallen van stenen en blokken
2. Transport	2	2. Vervoer
3. Emploi d'outils, machines et mécanismes	—	3. Gebruik van werktuigen, machines, enz.
4. Manipulations et chutes d'objets	1	4. Manipulaties, vallen van voorwerpen
5. Chute de la victime	1	5. Vallen van het slachtoffer
6. Asphyxies et intoxications	—	6. Verstikking en vergiftiging
7. Explosions, incendies, feux	—	7. Ontploffingen, brand, vuur
8. Emploi des explosifs	—	8. Gebruik van springstoffen
9. Electrocution	—	9. Elektrokutie
10. Divers	—	10. Allerlei
Total	8	**Totaal**

4. — *USINES - INDUSTRIE SIDERURGIQUE*

Dans les établissements surveillés par l'Administration des Mines autres que les mines, les minières et les carrières, avec leurs dépendances, c'est-à-dire pour l'essentiel les usines sidérurgiques, avec leurs cokeries, mais aussi les cimenteries, les cokeries indépendantes et les fabriques d'agglomérés indépendantes, la statistique des accidents est longtemps restée limitée aux accidents mortels.

Ces dernières années une statistique plus détaillée des accidents de la sidérurgie a pu être établie, mais elle n'a toujours pas pu être étendue aux autres usines.

Le tableau n° 6 B concerne les accidents mortels survenus dans l'ensemble des usines sidérurgiques ou autres.

4. — *FABRIEKEN - STAALNIJVERHEID*

In de andere inrichtingen die onder het toezicht van de Administratie van het Mijnwezen staan — andere dan mijnen, groeven en graverijen en hun aanhorigheden — en dat zijn hoofdzakelijk de siderurgiebedrijven met hun cokesfabrieken, maar ook de cementfabrieken en de zelfstandige cokes- en agglomeratenfabrieken, is de statistiek van de ongevallen jarenlang tot de dodelijke ongevallen beperkt gebleven.

De jongste jaren is men ertoe gekomen een uitvoerige statistiek van de ongevallen in de staalindustrie op te maken, maar tot dusver heeft men die nog niet tot de andere fabrieken kunnen uitbreiden.

Tabel 6 B heeft betrekking op de dodelijke ongevallen in alle fabrieken samen, die van de staalindustrie en de andere.

TABLEAU n° 6 B

Accidents mortels survenus dans les usines surveillées par l'Administration des Mines en 1979

TABEL 6 B

Dodelijke ongevallen in de onder het toezicht van het Mijnwezen geplaatste fabrieken in 1979

CATEGORIES D'ACCIDENTS	N°	Nombre d'accidents mortels (1) / Aantal dodelijke ongevallen (1) — par divisions minières / per mijnafdeling: Hainaut Henegouwen	Liège Luik	Campine Kempen	ROYAUME HET RIJK	N°	KATEGORIEEN VAN ONGEVALLEN
Accidents occasionnés directement par les opérations de fabrication	010	—	—	—	—	010	Rechtstreeks door de fabricageverrichtingen veroorzaakte ongevallen
Transport :	020					020	Vervoer :
— Horizontal par véhicules sur roues		—	—	—	—		— Horizontaal met voertuigen op wielen
— Sur plans inclinés ou vertical par véhicules guidés ou sur roues		—	—	—	—		— Op hellende vlakken of vertikaal met geleide voertuigen of met voertuigen op wielen
— Autres (ponts-roulants, grues, scrapers, convoyeurs, etc...)		—	—	2	2		— Ander (rolbruggen, kranen, scrapers, transportbanden, enz..
Maniement ou emploi d'outils, machines et mécanismes	030	—	1	1	2	030	Hanteren of gebruik van gereedschap, machines of tuigen
Manipulations, chutes d'objets et éboulements	040	1	2	—	3	040	Manipulatie, vallen van voorwerpen en instortingen
Chute de la victime	050	1	—	1	2	050	Vallen van het slachtoffer
Asphyxies et intoxications (sauf par fumées d'incendie - voir 070)	060	7	—	—	7	060	Verstikking en vergifting (behalve door de rook van brand - zie 070)
Explosions, incendies, feux	070	1	—	—	1	070	Ontploffingen, brand, vuur
Emploi des explosifs	080	—	—	—	—	080	Gebruik van springstoffen
Electrocution	090	1	—	—	1	090	Elektrokutie
Divers	100	—	—	—	—	100	Allerlei
TOTAL		11	3	4	18		TOTAAL

(1) Décès endéans les 56 jours de la date de l'accident.

(1) Overleden binnen 56 dagen na de dag van het ongeval.

Ces accidents sont répartis d'une part, selon les causes, en dix catégories et d'autre part, géographiquement, par division minière. La division du Hainaut comprend la province du Hainaut et le Brabant wallon ; la division de Liège comprend les provinces de Namur, de Liège et de Luxembourg ; la division de Campine comprend les provinces des deux Flandres, d'Anvers et de Limbourg et le Brabant flamand.

Le nombre d'accidents mortels instruits par les ingénieurs des mines en 1979 dans ces établissements a été de 18.

Il a été de 11 unités dans la division du Hainaut, de 3 dans la division de Liège et de 4 unités en Campine.

L'analyse plus détaillée de la sécurité du travail dans l'industrie sidérurgique se fonde sur l'exploitation des rapports annuels des chefs de service de sécurité, d'hygiène et d'embellissement des lieux de travail des entreprises sidérurgiques.

Les tableaux statistiques dressés à partir de ces sources ne contiennent pas de données détaillées relatives aux accidents de travail de gravité moyenne.

Les rapports des services de sécurité des usines ont permis de dresser le tableau n° 7, qui donne le nombre total d'accidents chômants survenus dans l'industrie sidérurgique en 1979.

Les accidents sont classés suivant leurs causes matérielles. Comme les années précédentes, on constatera que les nombres les plus élevés se trouvent toujours sous les rubriques « divers » des trois dernières lignes du tableau qui totalisent encore 5.350 accidents chômants sur un total de 9.827 soit 54,4 % et parmi lesquels se trouve un accident mortel.

Parmi les causes définies, les accidents provoqués par le maniement d'outils à main sont les plus nombreux (969) ; les poussières et les substances brûlantes ou très inflammables ont fait respectivement 807 et 623 victimes, les machines 499 et les appareils de levage 481; ces cinq causes groupant 34 % des accidents dont la cause a été déterminée.

Les relevés des années précédentes avaient déjà permis de dégager l'importance relative de ces causes.

Il faut cependant souligner que les deux premières des causes citées ci-dessus ne sont généralement pas à l'origine d'accidents graves. Les trois autres (substances brûlantes, machines, appareils de levage) ont été en 1979 à l'origine de 5 des 13 accidents mortels signalés. Un accident grave a occasionné la mort par intoxication de quatre victimes. Par contre, sur 435

Deze ongevallen worden ingedeeld, eensdeels naar de oorzaken, in tien kategorieën en anderdeels geografisch, per mijnafdeling. De afdeling Henegouwen omvat de provincie Henegouwen en Waals-Brabant ; de afdeling Luik omvat de provincies Namen, Luik en Luxemburg ; de afdeling Kempen omvat de provincies Oost- en West-Vlaanderen, Antwerpen en Limburg en Vlaams-Brabant.

In 1979 hebben de mijningenieurs voor 18 dodelijke ongevallen in deze inrichtingen een onderzoek ingesteld.

In de afdeling Henegouwen waren er 11 doden ; in Luik 3 en in de afdeling Kempen 4.

De uitvoerige ontleding van de arbeidsveiligheid in de staalindustrie steunt op de jaarverslagen van de hoofden van de diensten voor veiligheid, gezondheid en verfraaiing der werkplaatsen van de staalbedrijven.

De aan de hand van deze bronnen opgemaakte statistische tabellen bevatten geen gedetailleerde gegevens over de halfzware ongevallen.

De verslagen van de veiligheidsdiensten van de fabrieken hebben de gegevens voor tabel 7 verschaft, waarin het totaal aantal in 1979 in de staalindustrie gebeurde ongevallen met arbeidsverzuim aangeduid is.

De ongevallen worden naar hun materiële oorzaken ingedeeld. Zoals de vorige jaren worden nog altijd de hoogste cijfers aangetroffen in de rubrieken « allerlei » van de laatste drie regels van de tabel, die samen nog 5.350 ongevallen met arbeidsverzuim tellen op een totaal van 9.827 d.i. 54,4 %, waaronder 1 dodelijk ongeval.

Onder de bepaalde oorzaken heeft het hanteren van handgereedschap het grootste aantal ongevallen veroorzaakt (969) ; het stof en brandende of licht ontvlambare stoffen hebben respectievelijk 807 en 623 slachtoffers gemaakt, de machines 499 en de heftoestellen 481 ; deze vijf oorzaken hebben betrekking op 34 % van de ongevallen met een bepaalde oorzaak.

In de tabellen van de vorige jaren was de betrekkelijke belangrijkheid van deze oorzaken al opgevallen.

Toch dient aangestipt dat de twee eerstgenoemde oorzaken over 't algemeen geen zware ongevallen uitlokken. De drie andere oorzaken (brandende stoffen, machines, heftoestellen) hebben in 1979, 5 van de 13 dodelijke ongevallen veroorzaakt. Bij één zwaar ongeval zijn 4 doden gevallen door vergiftiging. Van de 435 ongevallen die een blijvende werkon-

TABLEAU n° 7. — *Accidents survenus en 1979 dans les établissements de l'industrie sidérurgique*

TABEL 7. — *In 1979 in de ijzer- en staalbedrijven gebeurde ongevallen*

CAUSES	Nombre de victimes / Aantal slachtoffers	Nombre de victimes ayant subi une incapacité / Aantal slachtoffers met: temporaire totale / volledige tijdelijke ongeschiktheid	permanente / blijvende ongeschiktheid	Tués / Doden	OORZAKEN
— Machines	499	463	35	1	— Machines
— Machines motrices ou génératrices et pompes	79	76	3	—	— Aandrijfmachines, generatoren en pompen
— Ascenseurs et monte-charges	8	7	1	—	— Personen- en goederenliften
— Appareils de levage	481	444	35	2	— Heftoestellen
— Transporteurs-courroie, chaînes à godets etc...	101	96	5	—	— Transporteurs-banden, emmerladders, enz.
— Chaudières et autres récipients soumis à pression	31	30	1	—	— Stoomketels en andere vaten onder druk
— Véhicules	447	414	32	1	— Voertuigen
— Animaux	5	5	—	—	— Dieren
— Appareils de transmission d'énergie mécanique	101	93	8	—	— Transmissies van mechanische energie
— Appareillage électrique	108	106	2	—	— Elektrische apparatuur
— Outils à main	969	926	43	—	— Handgereedschap
— Substances chimiques	134	131	3	—	— Chemische stoffen
— Substances brûlantes ou très inflammables	623	609	10	4	— Brandende of licht ontvlambare stoffen
— Poussières	807	800	7	—	— Stof
— Radiations et substances radioactives	82	82	—	—	— Stralingen en radioactieve stoffen
— Surfaces de travail qui ne sont pas classées sous d'autres rubriques	1 897	1 789	108	—	— Niet onder een andere rubriek ingedeelde werkvlakken
— Agents matériels divers	1 975	1 851	123	1	— Verscheidene materiële agentia
— Agents non classés faute de données suffisantes	1 478	1 459	19	—	— Wegens onvoldoende gegevens niet ingedeelde agentia
— Intoxication CO	4	—	—	4	— Intoxicatie CO
Total	9 829	9 381	435	13	**Totaal**

accidents ayant entraîné une incapacité permanente, 35 sont dus au machines, 35 aux appareils de levage et 32 aux véhicules. La cause de plus de la moitié des accidents à incapacité permanente n'a pas été précisée (250 sur 435).

Les travaux effectués par le Comité de la Sidérurgie belge permettent de calculer les taux de fréquence et de gravité des accidents survenus dans les usines sidérurgiques. Les résultats sont consignés dans le tableau n° 8.

geschiktheid veroorzaakt hebben, zijn er daarentegen 35 te wijten aan machines, 35 aan heftoestellen en 32 aan voertuigen. Van meer dan de helft van de ongevallen met een blijvende werkongeschiktheid is de oorzaak niet nader bepaald (250 op 435).

De werkzaamheden van het Comité van de Belgische Siderurgie leveren de nodige gegevens voor de berekening van de veelvuldigheidsvoet en de ernstvoet van de in de staalindustrie gebeurde ongevallen. De uitslagen staan in tabel 8.

TABLEAU n° 8

Taux de fréquence et de gravité des accidents survenus dans l'industrie sidérurgique belge en 1979 et nombre moyen de journées chômées par accident

(chiffres provisoires)

TABEL 8

Veelvuldigheidsvoet en ernstvoet van de in 1979 in de Belgische staalnijverheid gebeurde ongevallen en gemiddeld aantal verletdagen per ongeval

(voorlopige cijfers)

		Usines sidérurgiques IJzer- en staalfabrieken	
		Salariés Werklieden	Employés Bedienden
Nombre d'inscrits au 31.12.79	Aantal ingeschreven op 31.12.79	42.665	9.195
Nombre total d'heures prestées N	Totaal aantal gewerkte arbeidsuren N	68.464.356	16.205.200
Nombre d'accidents mortels	Aantal dodelijke ongevallen	9	3
Nombre d'accidents chômants (y compris les cas de morts et d'incapacité permanente) : A	Aantal ongevallen met arbeidsverzuim (dodelijke ongevallen en ongevallen met blijvende ongeschiktheid inbegrepen) : A	8.872	166
Taux de fréquence : $T_f = \frac{A \times 10^6}{N}$	Veelvuldigheidsvoet	129,7	10,4
Rappel de 1978 : T_f	Idem voor 1978 : T_f	120,1	10,5
Nombre de jours d'incapacité temporaire totale (à l'exclusion des cas de mort et des incapacités permanentes) : J	Aantal dagen met volledige tijdelijke ongeschiktheid (met uitsluiting van dodelijke ongevallen en ongevallen met blijvende ongeschiktheid) : J	131.578	2.954
Nombre de jours conventionnels de chômage pour les cas de mort et d'incapacité permanente	Overeengekomen aantal verloren dagen wegens dodelijke ongevallen en ongevallen met blijvende ongeschiktheid		
$J' = (M + \frac{P}{100}) \times 7.500$		252.154	29.477
TOTAL	TOTAAL	383.732	32.431
Taux de gravité : T_g	Ernstvoet : T_g		
— sans J'	— J' niet inbegrepen	1,9	0,2
rappel de 1978	idem voor 1978	1,8	0,2
— avec J'	— J' inbegrepen	5,6	2,0
rappel de 1978	idem voor 1978	4,9	1,1
Nombre moyen de journées chômées par accident	Gemiddeld aantal verletdagen per ongeval		
— sans J'	— J' niet inbegrepen	14,8	17,8
rappel de 1978	idem voor 1978	14,8	20,9
— avec J'	— J' inbegrepen	43,3	195,4
rappel de 1978	idem voor 1978	40,7	100,0

Ce tableau reprend les usines sidérurgiques affiliées au Comité de la sidérurgie belge ; il concerne au total 42.665 salariés et 9.195 employés, sur un total de 45.601 salariés et 10.414 employés occupés

Deze tabel slaat op de staalbedrijven die bij het Comité van de Belgische Siderurgie aangesloten zijn ; deze ondernemingen stellen 42.665 arbeiders en 9.195 bedienden tewerk op een totaal van 45.601

dans les établissements de l'industrie sidérurgique belge surveillés par l'Administration des Mines en 1979.

Le taux de fréquence et le taux de gravité sont calculés de la même façon que pour les mines. Pour le calcul du taux de gravité, le nombre de jours effectifs ou conventionnels de chômage pour les cas de mort et d'incapacité permanente ou temporaire est établi de la même manière que pour les mines, minières et carrières souterraines (7.500 pour la mort ou l'incapacité permanente totale à 100 %).

Le tableau n° 8 montre que le taux de fréquence, c'est-à-dire le nombre d'accidents chômants par million d'heures d'exposition au risque, est passé à 129,7 en 1979 contre 120,1 en 1978.

Le taux de gravité (1) calculé au tableau n° 8 est de 5,6 en 1979 et a diminué par rapport à l'année précédente (4,9 en 1978).

Enfin, ces éléments permettent d'établir le nombre moyen de journées chômées par accident du travail, appelé « taux de risque ». Si l'on tient compte des nombres de journées attribuées forfaitairement aux accidents mortels ou générateurs d'incapacités permanentes on obtient 43,3 journées chômées par accident dans les usines sidérurgiques.

arbeiders en 10.414 bedienden in al de ondernemingen van de Belgische staalindustrie die in 1979 onder het toezicht van het Mijnwezen geplaatst waren.

De veelvuldigheidsvoet en de ernstvoet worden op dezelfde manier berekend als voor de mijnen. Bij de berekening van de ernstvoet wordt het aantal daadwerkelijk of konventioneel verloren dagen voor ieder dodelijk ongeval of voor ieder ongeval met blijvende of tijdelijke volledige ongeschiktheid op dezelfde wijze vastgesteld als voor de mijnen, de graverijen en de ondergrondse groeven (7.500 voor een dode of een volledige blijvende werkongeschiktheid van 100 %).

Uit tabel 8 blijkt dat de veelvuldigheidsvoet, d.i. het aantal ongevallen met arbeidsverzuim per miljoen uren blootstelling aan het risico, in 1979 gestegen is tot 129,7 tegen 120,1 in 1978.

De ernstvoet (1), die in tabel 8 aangeduid is, beloopt 5,6 in 1979 (4,9 in 1978).

Aan de hand van deze cijfers kan ten slotte het gemiddeld aantal verletdagen per arbeidsongeval, soms « risicovoet » genoemd, berekend worden. Als men de dagen die aan de dodelijke ongevallen en aan die met blijvende ongeschiktheid worden toegekend meerekent, bekomt men 43,3 verletdagen per ongeval in de ijzer- en staalfabrieken.

TABLEAU n° 9

Accidents survenus en 1979 dans les fabriques d'explosifs

TABEL 9

In 1979 in de springstoffabrieken gebeurde ongevallen

Fabriques d'explosifs	Sud Zuiden	Nord Noorden	Royaume Het Rijk	Springstoffabrieken
— Nombre de victimes :				— Aantal slachtoffers :
— ayant subi une incapacité temporaire totale	78	99	177	— met volledige tijdelijke ongeschiktheid
— permanente	—	—	—	— met blijvende ongeschiktheid
— Tués	—	1	1	— Doden
Total des victimes	78	100	178	Totaal aantal slachtoffers

(1) Nombre de journées chômées des suites d'accidents par 1.000 heures d'exposition au risque, y compris les journées chômées conventionnellement attribuées aux accidents mortels (7.500) ou aux accidents entraînant une incapacité permanente de travail (7.500 pour 100 % d'invalidité).

(1) Aantal dagen met arbeidsverzuim ingevolge ongevallen per 1.000 uren blootstelling aan het risico, met inbegrip van het konventioneel aantal verloren dagen wegens dodelijke ongevallen (7.500) of wegens ongevallen die een blijvende arbeidsongeschiktheid veroorzaakt hebben (7.500 voor 100 % invaliditeit).

5. — *FABRIQUES D'EXPLOSIFS*

Le tableau n° 9 concerne les accidents survenus en 1979 dans les fabriques d'explosifs. Il y a eu dans les 12 fabriques d'explosifs, les 6 manufactures de pyrotechnie et les 6 dépôts de vente d'explosifs, qui occupaient en 1979, 2.393 ouvriers et 191 employés, 177 accidents chômants contre 236 en 1978.

En 1979, il y a aussi un accident mortel dans une fabrique d'explosifs.

5. — *SPRINGSTOFFABRIEKEN*

Tabel 9 heeft betrekking op de ongevallen in de springstoffabrieken. In de 12 springstoffabrieken, de 6 vuurwerkerijen en de 6 verkoopdepots van springstoffen, waar in 1979, 2.393 arbeiders en 191 bedienden tewerkgesteld waren, zijn 177 ongevallen met arbeidsverzuim gebeurd, tegenover 236 in 1978.

Eén arbeider is verongelukt in een springstoffabriek.

Selection of Coal Abstracts

By kind permission of the Technical Information Service of the International Energy Agency, we publish in each number a selection of summaries of articles and publications which have already appeared in « Coal Abstracts ». The intention is to provide regular information, classified by subject, *on all the latest innovations.*

Anyone wishing to take out a subscription for « Coal Abstracts » (which appears monthly), should write to : Mr. I.H. Hogg, Head, Technical Information Service, IEA Coal Research, 14-15 Lower Crosvenor Place, London SW1W OEX, England.

COAL INDUSTRY

5362

Saving fuel by using waste heat and environment energy.

Bauer L.

Energieanwendung ; 28 (6) ; 207-212 (Nov. 1979)

Discusses alternatives for meeting long-term energy requirements in Austria which are estimated to become 50 % higher in 1990 than in 1979. Although Austria possesses national resources (58 million tons of exploitable brown coal plus the same amount again of further certain and probable brown coal reserves, 22 million tons of crude oil and 14 million m³ of gas plus possible reserves of 61-64 billion m³) up to 80 % of the country's needs energy will have to be met by import. Proposals are presented for more efficient energy use, application of alternative energy sources and introduction of energy saving technologies which include : increased use of waste heat from existing power plants for household heating, construction of mini-power plants (10 MW) for small cities with 10,000 inhabitants and more and use of waste heat for household heating, the combustion of wood and harvested straw in power plants, installation of heat pump systems and solar equipment in households. The alternative for increasing the efficiency of fossil-fuel power plants lies in the utilization of the Austrian « triple steam process », with which up to 30 % of fossil fuel can be saved. The process employs potassium, diphenyl and water for steam production. The proposed alternatives are discussed with estimates on investment costs, economic calculations, and figures on electricity production and saving. (15 refs.) (In German).

5364

Coal and the human need for energy. In Future sources of organic raw materials : CHEMRAWN I

Bagge C.E.

World conf. on future sources of organic raw materials, Toronto, Canada, 10-13 July 1978. Oxford, UK, Pergamon Press, pp 33-40 (1980) St-Pierre, L.E. ; Brown G.R. (eds.).

The world faces the problem of declining supplies of petroleum and natural gas, and must turn increasingly to its abundant supplies of coal, which make up 47 % of the energy content of recoverable reserves of the globe's fossil fuels. Coal is widespread, with enormous deposits in the U.S. and U.S.S.R. and the People's Republic of China, and important reserves in many other countries. Most industrial nations plan expanded coal production by 1985. U.S. policy calls for virtually doubled coal production in that period. The U.S. is the leading coal exporter, but its shipments have been declining recently, due to domestic constraints on mining and increasing costs. All coal-producing nations need to redouble their efforts to boost production.

5368

Coal-oil mixture marketing potential in the state of Florida. In 2nd international symposium on coal-oil mixture combustion.

Varney A.M. ; Tuliano L. ; Woerner G.W. ; Worbs H.E.

2. international symposium on coal-oil mixture combustion. Danvers, MA, USA, 27 Nov 1979. CONF-791160 - (Vol. 2) 18 p. Paper 5. Session VIII pp (1979).

The State of Florida has completed a nine-month project to conduct a technical-industrial assessment of the possibilities of significant energy savings in the industrial and commercial sector through the conversion of current liquid and gas fueled systems to burning coal and coal-oil mixtures. The project performance consisted of : (1) A broad engineering study aimed at identifying the major industrial and commercial users of fossil fuels in the State of Florida. (2) An economic study to estimate the annual oil-equivalent energy savings achievable by the conversion of present systems to coal/coal oil mixture systems. (3) Preparation of an energy conservation plan based upon the recommendations of the project. During the course of the project, fossil fuel energy users have been identified, located within the state by mail zip code, and catalogued according to : (1) Base fuel ; (2) User application ; (3) User consumption ; (4) Number of units ; (5) Size of each unit ; and (6) Design of each unit. The data collected in the present study permit a unique approach to assessing the market potential of coal-oil mixtures in the State of Florida, particularly, since it is now possible to identify the energy consumption regionally, by unit type, etc. These data, and the subsequent analyses have enabled a marketing assessment to be formulated from both the supplier and user points of view. The supplier now knows where his potential markets are located and what the anticipated demand would be ; on the other hand, the user categories have been assessed and cost-to-convert to COM has been established. Since the State of Florida is essentially energy dependent upon sources from outside the State's boundary, the conclusion reached in the present project may provide some fundamental guidelines for marketing COM on a national scale.

RESERVES & EXPLORATION

5382

Cross-borehole electromagnetic probing to locate high-contrast anomalies.

Lytle R.J. ; Laine E.F. ; Lager D.L. ; Davis D.T.

Geophysics ; 44 (10) ; 1667-1676 (Oct. 1979).

Electromagnetic (EM) probing between boreholes is useful for locating high-contrast geophysical anomalies such as a tunnel. Theoretical and experimental studies of EM field interaction with a tunnel show that minima in the received signal can be used for locating the tunnel. The theoretical studies show that, as a transmitter and receiver are lowered in separate boreholes, the minima can be interpreted easily to yield both the lateral and vertical positions of the tunnel. The main mechanism of EM field interaction with the tunnel appears to be diffraction, and the spatial variation of the field strength is affected by the tunnel shape. Frequencies from 10 to 70 MHz were studied to assess the usable frequencies. The field in the receiver borehole was an effective diagnostic when a half-wavelength in the surrounding medium was less than or equal to the diameter of the tunnel. EM probing at two test sites gave the locations of tunnels within 1 ft of the surveyed locations. 20 figures.

5386

Preparing standardized diagrams for drilling, water levels and wells by automatic plotting in the Knappenrode Glückauf brown coal complex.

Elter P.

Neue Bergbautech. ; 10 (5) ; 311-312 (May 1980).

Demonstrates a data flowsheet and coding symbols for drilling methods, and symbols for geologic strata and underground water levels. Geological cuts, strata isolines and hydroisolines of brown coal surface mines can be evaluated by computer and demonstrated by automated plotting. Improved mapping quality as well as standardized and fast geological data evaluation has been achieved with this system. (In German).

5396

Slotting of borehole sequences.

Gordon A.G. ; Reyment R.A.

J. Int. Assoc. Math. Geol. ; 11(3) ; 309-327 (Jun 1979).

A method is described for comparing and correcting borehole sequences using information from one or more physical logs recorded in the boreholes. The method is illustrated by a small worked example. Ways are described whereby constraints may be imposed on the comparison to allow the incorporation of relevant information, such as the presence of marker beds. An account is given of the comparison of three boreholes in the Lausing Group of Kansas and the effects of filtering, standardizing and weighing the logs are briefly discussed.

5403
Improved extraction of coal
King P.
J.S. Afr. Inst. Min. Metall. ; 80 (1) ; 1-4 (Jan 1980).

In considering the available reserves of coal, the importance of improved recovery is stressed, and three extraction ratios are defined : the geological extraction ratio (or exploitation factor), the economic extraction ratio (or mining factor), and the geometrical extraction ratio (or volumetric extraction factor). Factors affecting each of these ratios are discussed and it is concluded that, although geological factors cannot be considered in isolation from technical and economic factors, the geological extraction factor is the most significant criterion of whether the best use is being made of coal resources.

5404
Horizontal drilling technology for advance degasification
Thakur P.C. ; Poundstone W.N.
Min. Eng. (N.Y.) ; 32 (6) ; 676-680 (Jun 1980).

A mobile horizontal drilling rig, and drilling operations, are described. Borehole surveying instruments measure the pitch, roll and azimuth of the borehole assembly, and indicate the thickness of coal between the borehole and the roof or floor of the seam, thus locating faults, clay veins, sand channels and changes in seam thickness ahead of mining. Holes 75-100 mm also are drilled 300 m or more in advance of development headings.

5412
Extraction, preparation, transport and storage of solid carbonaceous material. In Future sources of organic raw materials : CHEMRAWN I
Durie R.A.
World conf. on future sources of organic raw materials, Toronto, Canada, 10-13 Jul 1978. Oxford, UK, Pergamon Press, pp. 219-231 (1980) St-Pierre, L.E. ; Brown G.R. (eds.).

Coal, because of its abundance relative to other fossil fuels, is being looked to as a major source of energy not only for direct use, but also in the form of liquid and gaseous fuels as petroleum and natural gas resources near depletion. There are many challenges to be met if coal is to fulfill this promise. Amongst these is the need to supply coal, as economically as possible and with minimum environmental impact, in ever increasing amounts, in the quality required, to coal based processes, be these thermal power or coal conversion plants. This paper considers briefly the current approaches to the mining, preparation, transport and storage of coal. The need to increase productivity and recovery efficiency during coal mining and preparation, to increase safety and minimize health hazards, and to minimize environmental problems are emphasized. Some areas where developments are underway also receive mention. To conclude, brief reference is made to some difficulties relative to coal, with regard to the use of oil shales, and present day products of photosynthesis as energy sources ; and to the role of government. (22 refs.).

5413
Analysis of the mechanics of rock cutting with disc roller cutters
Wang K.
Coal Sci. Technol. ; (3) ; 22-26 (Mar 1980)

Disc roller cutters on tunnel boring machines cut rock basically with crushing and shearing. Equations are derived for the calculation of thrust force, axial force and normal drag force of disc cutters. Cutting parameters of roller cutters, such as depth of penetration, radius of cutter, angle and radius of cutting edge are analysed and investigated. Finally an example of design and calculation is given. (In Chinese)

5417
Coal surface mining in the United Kingdom
Leigh W.J.P.
Neue Bergbautech. ; 10 (3) ; 141-143 (Mar 1980)

Summarizes the present state, mining conditions and future development of U.K. coal surface mining. Annual coal production of almost 70 surface mines is 14 million tonnes ; the majority of the mines have a small capacity. Continuous coal exploration is providing increasing amounts of exploitable coal ; the present level of production can be maintained for more than 30 years. Due to the hardness of the overburden the most suitable technology is excavation by dragline excavators (45 %) and shovel dozers (55 %) in combination with frequent blasting. Trends in improving excavation technology are directed toward : a medium sized and easily assembled and dismantled dragline excavator with a 12 m^3 bucket and 52 m boom length ; larger, high powered shovel dozers with a 9 m^3 shovel ; and larger skip lorries of 63 to 77 for material transport. Some features of land reclamation and environmental protection measures are also presented. (In German)

5419

Preliminary site investigation for opencast coal mining in the United Kingdom. In Use of heavy equipment in opencast mines

Leigh W.J.P.

Symp. on use of heavy duty equipment in opencast mines, Cottbus, German Democratic Republic, 16-20 Oct. 1978. COAL/SEM. 7/R.22 United Nations, Economic Commission for Europe, 38 pp (1978).

Describes the main areas of investigation undertaken by geologists and geotechnical engineers of the National Coal Board Opencast Executive when examining proposals for the surface mining of new opencast sites in the U.K. An expression is given for calculating the total cost of mining a given tonnage. Each of the parameters and variations which occur depending on working method and geological conditions are explained. The gathering, tabulation and storage of information from exploratory drilling in the U.K. is explained. A schedule of parameters used to assess the « rippability » of rocks as an alternative to blasting is given. Criteria include specific gravity, moisture content and seismic velocity. Compressive strength alone is regarded as an inadequate indicator. Procedures used in investigating soil and rock stability are briefly described. Circumstances are cited under which soil mechanics analysis has proved useful as well as situations in which rock mechanics analysis is required. A concluding description is given of how stereographic projection is used to assess combinations of discontinuities. The stereography analysis is illustrated by an actual example of an investigation carried out using a polar plot and Schmidt net. (In English)

5432

Coal, concrete and cement (some newer uses of concrete and cement in mining)

Middup C.G.

Min. Technol. ; 62 (715) ; 233, 235-236 (May 1980)

Glass fibre reinforced cement is used in roadway and shaft linings ; polypropylene reinforced concrete is being tested for this purpose. Steel rod reinforced concrete is also used as lining. Autoclaved concrete blocks reinforced with a steel mesh envelope can be used as a replacement for wooden chocks. Special cements are used for pump packing.

5448

Mechanized anhydrite storage depot in an HBNPC mine

Publ. Tech. Charbon. Fr. ; (1) ; 19-21 (1980)

Report on CoRT research successfully concluded in 1979. Presents a short description of the mechanized anhydrite-storage depot which supplies pit 5 west of the Lens group. The depot is operated by one man. Describes transloading, the tipping hopper, the filling hopper and the control system for the material levels and outfeeds. (In French)

5449

Blanzy coalfield - improving hydraulic stowing methods

Publ. Tech. Charbon. Fr. ; (1) ; 31-34 (1980)

Describes CoRT research which was successfully concluded in 1978. Includes a description of the Rozelay hydraulic-stowing installation which is located directly beneath 2 vertical boreholes (220 m long) which link it with the surface stowing system. The relatively complex feed installation features a flow control unit and is situated above the entry to the boreholes. The system features the distributor units, one for washery dirt 0/8 mm, the other for power station fly ash ; a vibrating screen and crusher for the fly ash ; below this is the mud tank with a mechanical agitator. Describes the water feed system and the safety features ; the flow speed is greater than the sedimentation speed. Presents the automatic control and flow regulation systems. The main objective of the CoRT research was to maintain the density of the washery material ; automatic washing sequence. The results obtained proved excellent. (In French)

5450

Centre and Midi coalfields - remote monitoring of front-end loaders engaged in face operations in the Aquitaine coalfield

Publ. Tech. Charbon. Fr. ; (1) ; 35-45 (1980)

Since the machine running-time control system was unable to keep up with the sequence of work at the workings, the Aquitaine coalfield decided to develop a remote-monitoring system comprising : a transmitter on each machine, underground transducers (all connected to a control point) and a surface control equipped with printers, counters and recorders. Two installations of this type have been put into service. Gives numerous details of the method of operation and of the dispatching system. (In French)

5456

Face-end restraint

Prod. Prod. Bull. ; (8) ; 9-10 (Mar 1980)

Compares losses in production at advancing and retreating faces during longwall mining due to face end restraints. Discusses the mechanisation of work-

ing advanced longwall face ends using an integrated face end system, rather than separately developed pieces of equipment. A gate-end system is then briefly described.

5459
Simulation of face end activities
Prod. Prod. Bull. ; (8) ; 19-20 (Mar 1980)

Describes two computer systems for assisting in the design of face ends. CMAC (computer aided multiple activity charts) and PREFECS (program to evaluate face end systems by computer simulation) are both part of the Face End Integration Project of the Mining Research and Development Establishment and are being tested at coal mines in the Barnsley, Western and North Derbyshire Areas.

5463
Supporting high roof fall areas along haulage roads
Bullers W.E. ; Burns F.A.
Min. Congr. J. ; 66 (4) ; 15-17 (Apr 1980)

Roof support methods used in some US collieries after roof falls which have left a high void are described. Semi-circular, steel arch tunnel liners have been used. This method is expensive, but fast, safe and permanent. In one instance, the void above the arches was backfilled through a borehole from the surface. Various methods of timbering are briefly described. A slidable canopy can be used to protect men ahead of the last support.

5464
Aspects of support technology in West German mines
Stace L.R.
Min. Eng. (London) ; 139 (224) ; 841-846 (May 1980)

The increasing use of shield supports within the West German coal industry and the contribution that these supports are making in both thick and thin seam sectors are discussed. A visit to a face incorporating full stowing of the waste is also described, along with an account of the pneumatic transport underground of cement and aggregate in a major coal mine development. The rock mechanics research group at Steinkohlenbergbauverein is described, and West German mining practice is compared with that in Britain.

5466
Factors that affect underground rockbolt reinforcement systems design
Farmer I.W. ; Shelton P.D.
Inst. Min. Metall., Trans., Sect. A ; 89 ; A68-A83 (Apr 1980)

Rockbolts utilize the structural properties of rock to improve the stability of surface and underground excavations. The mechanics of reinforcement include the restraint of individual rock blocks bounded by discontinuities, the reduction of dilatation by inhibition of slip and rotation in block of rock, the reduction of strata separation in stratified rocks and recompression of relaxed zones in weaker rocks. The design of rockbolt systems depends on the geotechnical properties of the discontinuity surfaces and of the intact rock between them, the size and shape of the excavation and the resultant magnitude of redistributed stresses, and the degree of deformation acceptable in the completed excavation. The complexity of design depends on the use and sensitivity of the excavation. A simple design approach for underground excavation is outlined and illustrated by reference to case histories.

5505
Cage position monitor using magnetic striping
Lewis D.C. ; Ormondroyd H.
Min. Technol. ; 62 (716) ; 267-271 (Jun 1980)

A contactless magnetic sensor measures the distance travelled by the cage by counting marks on a winding rope or guide rope. Experience with the system is reviewed.

5510
Results of swing measurements on cages conducted in rope guided mine shafts with strong air currents
Poppe D. ; Weissenborn H.
Neue Bergbautech. ; 10 (4) ; 238-242 (Apr 1980)

Investigates the influence of air currents from ventilating roads on the swing motion of hoisting cages. Two mine shafts were selected for the tests, shaft A with two-cage hoisting, and shaft B with one large hoisting cage for material transport. Measurements were carried out either with measurement rods or with 3 film cameras and markings in the shaft. The test results of the investigations show the maximum horizontal swing lengths in cm at cage speeds between 4 and 12 m/s and ventilation air speeds between 7 and 13.3 m/s. The swing of the cage in shaft A was low and had a maximum value of 14 cm after slowly passing the ventilation road. The cage swing in shaft B showed values between 20 and 75 cm in strong air currents, even after increasing the number of guide ropes from 6 to 8. Various proposals are made for the safety of hoisting operations in shaft B, including that the mean

air speed (resulting from cage speed plus ventilating current speed) should not exceed 20 m/s. (1 ref.) (In German)

5514

Manriding by APOD ski-lift featuring a bi-directional system with one active strand in an HBNPC mine

Publ. Tech. Charbon. Fr. ; (1) ; 23-29 (1980)

This report presents a short description of CoRT research which was successfully concluded in 1979. Sets forth the principle and advantages of bi-directional endless-rope manriding with one active strand. Describes the following components : drive head, boarding and alighting points, tension station, circuit structure, haulage rope and the manriding seats and discusses the safety devices. Gives an account of the method of operation and how the installation is used. Presents the conditions of installation. Includes an account of how the system was installed at Ledoux colliery - special features, cost of the equipment and running costs. Draws conclusions gained as a result of the Ledoux operation. (In French)

5520

Application of thermoelectric transducers for surface monitoring of air velocity, humidity and temperature for underground mines

Srivastava S.C. and others

J. Mines, Met. Fuels ; 27 (8) ; 227-230 (Aug 1979)

Transducers which detect the current due to the temperature difference between two thermoelectric semiconductor metal junctions can be used to measure air velocity, humidity and temperature. Thermistors can be used to measure temperature. A simple system for recording these quantities continuously at the surface has been undergoing mine trial.

5521

An air-flow anemometer with digital indication

Srinivasan S.S. ; Rangachari S.

J. Mines, Met. Fuels ; 27 (7) ; 213-214, 224 (Jul 1979)

A vane-type anemometer has been designed with direct digital indication of air flow rate using optical sensing of the blade motion. This is inherently more accurate than either mechanical counting or electromagnetic sensing which introduce damping of the shaft rotation.

5525

Optimum design of surface mine drainage pipelines for filter well systems

Weidner K. ; Mogwitz R.

Neue Bergbautech. ; 10 (3) ; 157-160 (Mar 1980)

Demonstrates the application of computer programs for the design of mine drainage pipe systems. This method is used for projecting optimum mine drainage, for cost calculations of drainage investment variants and for planning material and equipment requirements. The parameters of drainage pumps, filter wells, and the connecting sections of the pipe system are included in the computer calculations : rate of water flow, capacity, water pressure, loss of water pressure, material and equipment types and their particular investment and maintenance costs. One example of the calculation is presented. The water flow rates between 0.5 m^3/min and 2.5 m^3/min in sections of the pipe system required pipe diameters from 65 mm to 125 mm. The use of this method is considered to be particularly economical for drainage investment in large surface mines. (In German)

5526

Precalculation of atmospheric conditions in dry and moist underground mines

Aner L. ; Krause D.

Neue Bergbautech. ; 10 (4) ; 229-234 (Apr 1980)

Proposes a universally applicable method for precalculating underground air conditions, in particular, for forecasting mine temperatures in mines with varying moisture and underground air ventilation. The calculation method, demonstrated with a number of parameters and equations, was developed by the Institute of Mine Safety, Leipzig and is based on revised formulae of Djadkin (Leningrad Mining Institute). Results of work on the subject by Koenig, Boldizsar, Mundry, Woropaew, Starfield, Mueller and others are compared. Figures are taken predominantly from Soviet underground coal mines. The proposed mathematical method of the Institute of Mine Safety is regarded as accurate. Calculated temperatures in underground mines with varying dampness showed a maximum error of 0.4 K in comparison to actual measurements of mine temperature. (16 refs.) (In German)

5541

Special methods for limiting methane and coal dust explosions

Roman P. and others

Mine, Pet. Gaze ; 30 (3) ; 134-138 (Mar 1979)

The article presents the results of the research undertaken in 1977 regarding the accomplishment of an automated barrier for the limitation of methane and coal dust explosions. Improvements of the explosion detector were made by increasing its startup capacity, by reducing the response time, increasing the parasitic source selectivity and by creating a permanent control of its operation and alert capacity. The range of the explosion velocity propagation was also determined. To this purpose a mixed barrier consisting of an extinguishing substance (sodium bicarbonate) and water was formed, and the amount, of the extinguishing substance was distributed in such a way as each dispersor was able to extinguish the explosions which could produce in any section of the mining works. (In Romanian)

5549

The application of high pressure water jets to longwall mining

Summers W.A. ; Summers D.A.

Min. Eng. (London) ; 139 (225) ; 915-924 (Jun 1980)

Conventional hydraulic mining has shown the ability to mine coal at a rate in excess of 3000 tons/shift, but is limited in application to seams within favourable geology and, for higher production rates, steeper inclinations. The potential advantages of water jets for mining have led to the design of a Hydrominer for the more standard seam currently mined. In order to accommodate the less favourable conditions, the jet pressures have been increased and the flow rates decreased to minimize the water effects on the surrounding geology. In order to simplify the progress of such a machine from the drawing board through the proof of concept tests to the first trials in an underground face, the design has been built around an adaptation of the BJD Supermatic shearer power pack. The development of the machine from the first conceptual design through to a field test of the first cutting head in an opencast test site is described. Problems associated with the design of the head, identified in this trial, are discussed with the proposed solution. The tests carried out using the second generation of the Hydrominer cutting head are briefly discussed. These tests were carried out at the US Bureau of Mines test facility at Bruceton, Pa, in an artificial coal seam.

5560

Problems and findings of research in the field of wire ropes

Jehmlich G. ; Steinbach G.

Neue Bergbautech. ; 10 (4) ; 234-237 (Apr 1980)

Summarizes the achievements of the wire rope hoisting section of the Institute for Mine Safety, Leipzig during the last twenty years. Specific problems of wire rope utilization and safety have been solved, the service life of wire ropes, for instance, has almost doubled. Investigations on service life and rope stability were carried out with continuous working rope testing equipment DPM 50 and DPM 2 × 9. Guidelines for appropriate dimensioning of wire ropes and rope hoisting drives were elaborated, a calculation model for rope service life and rope dimensioning based on Woehler lines was derived. Regulations for rope monitoring and mine hoisting depending on mine conditions were drawn up. A new standard in mine hoisting, TGL 34022, is being studied in hoisting at various mines. (21 refs.) (In German)

5579

Theoretical and experimental studies on the air lift system of an exploration drilling rig

Lewitzki W.

Neue Bergbautech. ; 10 (5) ; 285-292 (May 1980)

Demonstrates detailed operational parameters and specifications of the hydropneumatic drilling rig MT 150/2M, employed in GDR brown coal surface mine exploration and well drilling. The machine is capable of drilling to a 120 m depth with a drilled diameter of 330 mm. The drilled material is brought to the surface by combined air lifting and water flushing. Principles of the system are explained. Several graphs show the influence of parameters on the process including pressure and speed of the compressed air for material lifting, length and diameter of the material removal pipe, influence of particle size of the drilling slush, air and water flow in drill hole and pipe, as well as efficiency of the flushing process. Suggestions are made for optimizing the rig's performance by using compressed air pipes with a wider diameter (1 inch), by maintaining a constant slush removal pipe diameter and by avoiding air and water turbulences. (20 refs.) (In German)

5588

Device enabling SSCM overhead locomotives to negotiate steep gradients in HBNPC mines

Publ. Tech. Charbon. Fr. ; (1) ; 1-7 (1980)

Report on CoRT research which was successfully concluded in 1978. This involved the development of a system enabling laden locomotives suspended from IPN 140 monorails to negotiate steep gradients (27 degrees instead of 16 degrees) so that the haulage operation can continue without the need for unloading. Describes the new system, which comprises a

monorail rack and a hydraulic drive trolley. Explains the method of operation and the type of application of the new device. Describes how the system was installed at Ostricourt. Discusses costs and the viability of such a system. Sets forth the advantages and potential of the new development. (In French)

5589

Application of an arch-crown setter for stone drifts in HBNPC mines

Publ. Tech. Charbon. Fr. : (1) : 9-13 (1980)

Report on research concluded successfully by the CoRT in 1978. This involved the design and construction of a labour-saving device which would also improve safety standards during the setting of arch crowns. The report mentions the limitations imposed by such an operation together with the problem to be solved (technical difficulties and utilization) : includes a well-illustrated annex showing the device which can be readily adapted to the particular conditions of each roadhead. (In French).

PREPARATION

5605

Improving fines flotation recovery

Burdon R.G. : Mishra S.K.

Coal Age ; 85 (5) ; 220-222, 225-227 (May 1980)

Discusses the froth flotation of coal fines. There is an optimum size for each type of coal. If the feed is unsized, each fraction behaves independently, and slimes may be entrained in the flotation product. Coal oxidation is detrimental to flotation. Amines act as flotation promoters for oxidized coal. Electrokinetic studies, and the effects of clay minerals, are reviewed.

5609

Results of experimental production of fine COM by wet type mill. In 2nd international symposium on coal-oil mixture combustion.

Sato N.

2. international symposium on coal-oil mixture combustion, Danvers, MA, USA, 27 Nov 1979. CONF-791160 - (Vol. 2) 25 p, Paper 4, Session VI pp (1979)

This paper reports the results of experimental production of Fine COM with a wet type mill. Four kinds of bituminous coal were used as samples in the experiments, together with Middle East heavy crude oil. The following results were obtained : (1) The holdup of COM in the mill has an important influence on grindability. (2) All types of coal submitted to the test presented good grindability. (3) The coal density of 50 % and 55 % presented satisfactory grindability. (4) The temperature of COM during the pulverizing process should be as high as possible. (5) An increase in the production rate coarsens the particle size distribution of COM almost linearly. (6) When total moisture content of the crushed coal is of the order of 10 % or less, it was confirmed that the residual moisture content of COM can be dewatered to approximately 2 %, by heating the heavy oil supplied to the mill.

5659

Physico-chemical properties of coals with respect to the rock burst phenomenon

Zolcinska-Jezierska J. : Lason M. : Otowska A.

Arch. Gorn. ; 25 (1) ; 19-26 (1980)

Discusses the results of investigating physico-chemical properties of black coal from the Nowa Ruda mine with seams liable to rock bursts. Analysis of carbon dioxide adsorption samples taken from relieved and not relieved coal faces did not show changes in pore structure during destressing process. To determine the filtration properties of coal, coefficients of carbon dioxide diffusion into coal structure were determined. Character of gas-coal binding was estimated by analyzing adsorption heat. An attempt was made to relate the sorptive properties of coal and the value of a parameter which characterizes rock bursts the so-called degassing factors. (18 refs.) (In English)

5698

Extension of coking-coal resources by new process technologies of coal preparation and carbonization

Beck K.G. ; Meckel J.F.

Ironmaking Steelmaking ; 7 (3) ; 111-115 (1980)

Charge preheating, and partial briquetting, are described. The results of pilot and industrial scale experience with the precarbon process are discussed. Investments requirements and operating costs are compared for a coking plant with an annual production of 1.7 Mt for the following alternatives : the use of wet coal in conventional top charging ; the partial briquetting of the charge blend ; and the use of preheated coal.

5720

Westinghouse to launch coal gasifier with combined cycle unit

Stavsky R.M. ; Margaritis P.J.

Energy Int. ; 17 (3) ; 11-13 (Mar 1980)

Westinghouse has designed a prototype coal gasifier which can be integrated with a combined cycle unit and enable power plants to use coal in an efficient and environmentally acceptable way. Coal Gasification Combined Cycle (CGCC) technology burns gas made from coal in a gas turbine to generate power and then collects the hot exhaust gases to produce steam for further power generation. The commercialization of this process would meet the public's need for an economical and clean way to use coal, the utilities' need to meet electric power demands, and the nation's need to reduce dependence on imported oil. The Westinghouse process is described along with the company's plans for a demonstration plant and the option of a phased introduction to allow utilities to continue the use of existing equipment and generate revenue while adding to capacity. (DCK)

5734
Aviation fuels from coal
Arnold M.S.J. ; Paul P.F.M.
J. Inst. Energy ; 53 (415) ; 55-62 (Jun 1980)

When liquid fuels from coal are needed to supplement or replace petroleum products, because of factors including relative costs, availability, technical developments and patterns of demand, it is essential that they be premium fuels. Aviation fuels can be produced from coal either by total gasification followed by synthesis or by various hydrogenation processes. Synthesis leads to highly iso-paraffinic jet fuel whereas the hydrogenation of locations of coal extracts or coal tars leads to high-density, high-energy aviation kerosenes of near conventional performance and compatible with existing fuels. Performance testing of experimental quantities of coal-derived fuels has shown that they can match most of the requirements of existing specifications but there may be some deviations, the significance of which has to be assessed. The economics of coal liquefaction processes are briefly discussed.

5745
Mathematical modeling and experimental studies of thermal reactions of coal
Jain R.
Pasadena CA, California Inst. of Tech., 312 pp (1980) Thesis (Ph. D.).

This dissertation discusses theoretical and experimental research on coal pyrolysis. In the theoretical part, a mathematical model based on coal's chemical structure and its reactions is developed for computer simulation of pyrolysis. Firstly, the important organic functional groups of carbon, hydrogen and oxygen in medium and high rank coals are organized into a conceptual model for coal's chemical structure. Using the principles of thermochemistry of free radicals as guidelines, the important categories of chemical reactions in coal pyrolysis are postulated. A set of 41 series-parallel reactions represents the chemical change. It is concluded that there is no a priori distinction between volatiles and non-volatiles in a coal. They are both formed from the same chemical structure, and are basically an inevitable consequence of each other's formation. For the purpose of mathematical modeling, coal is considered to be a population of randomly distributed functional groups on a matrix. A scheme based on statistical transformations is devised to compute concentrations of reacting configurations before and during pyrolysis. The rates of reactions are expressed in terms of these concentrations. Differential equations governing the rate of change of state variables with pyrolysis time are formulated and numerically integrated on the computer. Pyrolysis results are predicted in terms of the state variables. The dependence of the yield and composition of volatiles on (a) transport parameters like particle size and pressure, and (b) kinetic parameters like time, temperature and time-temperature history, is investigated experimentally. Gaseous products are analyzed using chromatography, while tar is characterized by GPC, NMR and elemental analysis.

COMBUSTION

5753
Combustion of single coal particles in a jet
Ragland K.W. ; Weiss G.A.
Energy (Oxford) ; 4 (2) ; 341-348 (Apr. 1979)

The combustion of isolated coal particles suspended in an ascending jet simulating conditions in a fluidised bed has been studied. Different coals, particle sizes between 2 and 12 mm, gas temperatures of 705-816 C, and different gas compositions (air and mixtures of air and nitrogen) were used. Devolatilization took up to 80 s for the largest particles. The duration of combustion does not depend strongly on the coal type or the temperature but varies as the square of particle size, and inversely with the concentration of oxide in the gas.

5794
New ways to use coal probed : making an abundant fuel cleaner.
Electr. Light Power (Boston) ; 58 (2) ; 9-11 (Feb 1980)

Some Federal support will be given to all the potential schemes for using coal in a clean and efficient manner

until a few begin emerging as the most-feasible choices. Utilities are expanding their traditional coal-fired capacity, especially in areas which now depend on oil and natural gas, although 57 percent of the planned expansions were delayed in 1979 for financial and environmental reasons. Coal plants will adopt new technologies, such as dry scrubbing systems and new chemical additives, as they become available. Coal liquefaction and gasification, synfuels, magnetohydrodynamics, and research into better mining and combustion techniques will receive increasing Federal funding. A summary of current projects includes funding levels, technical problems to be overcome, and a positive prognosis that a solution will be found for the country's energy crisis. (DCK)

5799

Recent developments in desulphurization of combustion gases from thermal power stations

Darmont G.

Electricité ; (169) ; 13-19 (Dec 1979)

There are various techniques of reducing atmospheric pollution caused by SO^2. The author only deals with the method of flue gas desulphurization (FGD) which can be applied to both coal-fired and fuel-oil fired heating systems. The method consists of selectively extracting sulphur oxide from the combustion gases. The most common method of achieving this separation is by chemical reaction. The large number of variations on this method fall into two main categories : compounds formed by sulphur oxide fixation, which are then marketable and compounds which are not marketable. Discusses the methods involving limestone or chalk, in which the compounds are not ungraded and the problems of storing such compounds. Looks at developments in applications of FGD method in the U.S.A., Japan and Europe ; considers the economic aspects and future scope of the method. (3 refs.) (In French)

5805

The use of colliery spoil as a source material for the building and civil engineering industries

Chauvin R.

Publ. Tech. Charbon. Fr. ; (1) ; 55-63 (1980)

The problem of colliery spoil is becoming more and more important due to the large space requirement for stocking purposes together with the environmental problems this poses. One solution involves an attempt to upgrade this material. After grading, most black or red colliery spoil is used for road construction or for making concrete. By means of thermal treatment it is possible to obtain quality construction materials : bricks, lightweight sand and sintered or expanded aggregates. The spoil can be used as feedstock for cement works or in the fabrication of pozzolane or hydraulic binders. Investigations have been conducted into the fabrication of mineral wool and vitroceramic materials. It is proposed to use these materials for making alumina. (In French)

HEALTH & SAFETY

5878

Requirements on electrotechnical installations in plants with coal and coke dust hazards

Weigold S.

Neue Bergbautech. ; 10 (3) ; 180-182 (Mar 1980)

Safety experiments on coal and coke dust inflammation and spontaneous ignition caused by electrical equipment are presented along with results. Commercial connectors, electrical coils, electronic printed board assemblies, switch and circuit breaking gear were tested for inflammation under dust conditions and with a settled layer of dust on the equipment. These test results were used for the preparation of a revised safety standard TGL 34813, which went into effect in January 1979. The standard includes reductions in safety requirements concerning specific electrical installations. Various details from this standard, e.g. permissible surface heat, permissible values of currents and voltage, spark discharge and dust cleaning requirements, are given. (6 refs.) (German)

5880

Consideration of coal dust properties for the utilization of electrotechnical equipment

Linstroem H.-J.

Neue Bergbautech. ; 10 (4) ; 247-250 (Apr 1980)

Illustrates details of inflammation and smouldering fire experiments conducted at the Institute of Mine Safety in Leipzig. Five graphs show the time span to inflammation of dust layers up to 50 mm thick settled on printed board assemblies, which become heated during their operation. Further experiments on dust-air mixture ignition by electric sparks from switches and connections are discussed. The tests enabled safety requirements to be lowered from IP 54 to IP 43 in plants with coal dust hazards. Main results of the tests are the admissibility of connecting and disconnecting circuits in dust conditions with electricity flow of 500 V, 10 A, cos φ of 0.95 and 220 V, 10 A, cos φ of 0.65. New standards for equipment insulation and dust protection of electrical casings have also been developed. The lowering of specific safety requirements is seen as a substantial cost saving measuring in the coal industry. (In German)

5881

Effects of fire smoke on mine rescue operations

Florschuetz P. ; Roessiger U.

Neue Bergbautech. ; 10 (4) ; 250-254 (Apr 1980)

Studies visibility in mine roadways filled with smoke of varying density. Details of the investigations show visibility using either self-rescuers, mining gas masks or no protection devices. Results of visibility tests carried out by four different authors are compared. Various mine rescue work under conditions with visibility between 0.5 m and 2.0 m due to smoke and in temperatures not exceeding 30 C included : construction of a fire dam, removal of a 15 m long conveyor belt, and use of an escapeway with temperature and carbon monoxide measurement. The main conclusion of the investigation was that rescue work under smoke conditions requires at least twice the normal rescue time. The results will be considered for the design of changing points for self-rescuers and for the design of escapeways and escape chambers. (6 refs.) (In German)

Communiqué

AUTOMATISIERUNG DER BERGBAUINDUSTRIE, Varna, Bulgarien, Mai 1981.

Die IV. Nationale Wissenschaftlich - Technische Konferenz mit internationaler Beteiligung zum Thema « Automatisierung der Bergbauindustrie », wird vom 7. bis 9. Mai 1981 im Internationalen Heim der Wissenschaftler « Frédéric Joliot-Curie », Kurort « Druschba » bei Varna stattfinden. Die thematischen Richtungen sind :

Mededeling

1. Untertagebaue
2. Tagebaue
3. Aufbereitungsanlagen
4. Automatisierung der Elektroversorgung in den Gruben.

Für weitere Auskünfte, wenden Sie sich bitte an : 1000 Sofia, Rakowski-Strasse 108. Verband Bergbau, Geologie und Hüttenwesen für die Konferenz « Automatisierung ».

Bibliographie

MEMENTO DES MINES ET CARRIERES. — Régie Publicité Industrielle, 36, rue du Fer à Moulin, F-75005 Paris. 1981, 23e édition, 540 p., nombr. fig. et tabl. Prix : 246,96 F. + port.

I. Mémento administratif.
II. Mémento de fournisseurs de matériels de mines et carrières. Liste alphabétique, adresses, classement par matériels.
III. Mémento technique.
1. Symboles d'unités françaises - Masses volumiques
2. Recherches et sondages
3. Travaux préparatoires et abattage

Bibliografie

4. Extraction
5. Chargement et transport
6. Soutènement
7. Remblayage
8. Aérage
9. Exhaure
10. Sécurité et protection individuelle
11. Préparation des minerais et des matériaux
12. Energie
13. Télécommunications
14. Exploitation à ciel ouvert
15. Transmissions hydrauliques - Lubrification

IV. Mémento économique.

L'offre mondiale de la technique minière.

L'exposition spécialisée dans la construction minière en tête dans le monde entier. Le rendez-vous le plus important du monde pour les branches et experts concernés. Bourse internationale du savoir-faire. Une chance unique en 1981. A Düsseldorf.

Technique minière pleine d'avenir
De nouvelles technologies. Des Systèmes. Des machines. C'est ici que les fabricants les mieux placés dans le marché mondial de la construction minière occuperont une surface d'exposition de plus de 100.000 mètres carrés. En 1976, on comptait déjà 518 exposants en provenance de 22 pays.

Le know-how de la construction minière – des décisions pour aujourd'hui et demain
Tremplin pour les solutions des problèmes de l'énergie et des matières premières.

Le congrès sur la construction minière, Düsseldorf
Les experts miniers du monde entier viendront échanger leurs idées et expériences sur la sauvegarde de l'énergie et des matières premières, les possibilités de la valorisation du charbon et sur les développements techniques de l'industrie minière de la houille, du lignite, de l'exploitation des minérais, de la potasse et des sels minéraux.

Profitez de ces contacts à Düsseldorf!

Coupon. Veuillez nous envoyer gratuitement:
☐ Prospectus visiteurs Bergbau
☐ Programme du congrès Bergbau
☐ Programme du congrès Tunnelbau
☐ Programme du congrès Interocean

Veuillez nous faire parvenir au prix unitaire de 135,-F + 10,-F de frais d'envoi sus. . . . . catalogues Bergbau, payable par chèque au nom de Debelux lors de votre commande. Les catalogues seront publiés début mai 1981.
Renseignement et cartes d'entrée
CHAMBRE DE COMMERCE BELGO-LUXEMBOURGEOISE-ALLEMANDE
1040 Bruxelles. Rue du Commerce, 20, 2e Et. Boîte 2. Tél.: 02/511.38.36.

Exposition Minière Internationale et Congrès
Düsseldorf, 11.–17.6.1981

Congrès sur la construction de tunnels
Düsseldorf, 11.–13.6.1981
Al'occasion de Bergbau 81

Congrès international sur l'exploitation des fonds sous-marins
Düsseldorf, 15.6.1981
Dans le contexte de Bergbau 81

Annales des Mines de Belgique

Annalen der Mijnen van België

SERVICE GÉOLOGIQUE DE BELGIQUE
BIBLIOTHÈQUE

Publication de l'Institut National des Industries Extractives et de l'Administration des Mines

Publikatie van het Nationaal Instituut voor de Extractiebedrijven en het Bestuur van het Mijnwezen

Direction-Rédaction
Institut National
des Industries Extractives
B-4000 Liège, rue du Chéra, 200

Directie-Redactie
Nationaal Instituut
voor de Extractiebedrijven
Tél. (041) 52 71 50

Edition - Abonnements
Publicité
Editions Techniques
et Scientifiques

B-1050 Bruxelles
Rue Borrens, 35-43
Tél. (02) 640 10 40

Uitgeverij - Abonnementen
Advertenties
Technische en Wetenschappelijke
Uitgaven

B-1050 Brussel
Borrensstraat, 35-43
Tel. (02) 640 10 40